MEMORANDUM

CITY/BOROUGH OF JUNEAU
155 South Seward Street, Juneau, Alaska 99801

DATE: July 8, 2014

TO: Planning Commission

FROM: Beth McKibben, Planner BMc
Community Development Department

FILE NO.: STV2013 0001

PROPOSAL: Vacate a portion of Gastineau Ave to allow rebuilding of an 8-plex on existing foundation.

GENERAL INFORMATION

Applicant:	Owen K Clark
Property Owner:	Owen K Clark
Legal Description:	Pacific Coast Addition Block 2 Lot 11
Parcel Code No.:	1-C07-0-H02-011-0
Site Size:	5,000 sq. ft.
Comprehensive Plan Future Land Use Designation:	MU, Mixed Use
Zoning:	MU, Mixed Use
Utilities:	City water & sewer
Access:	Gastineau Avenue
Existing Land Use:	Vacant
Surrounding Land Use:	Northeast – (MU) Gastineau Ave, vacant Southeast – (MU) Multifamily Northwest – (MU) mixed use –retail/apartments West – (MU) mixed use –retail/apartments

CITY/BOROUGH OF JUNEAU
ALASKA'S CAPITAL CITY

VICINITY MAP

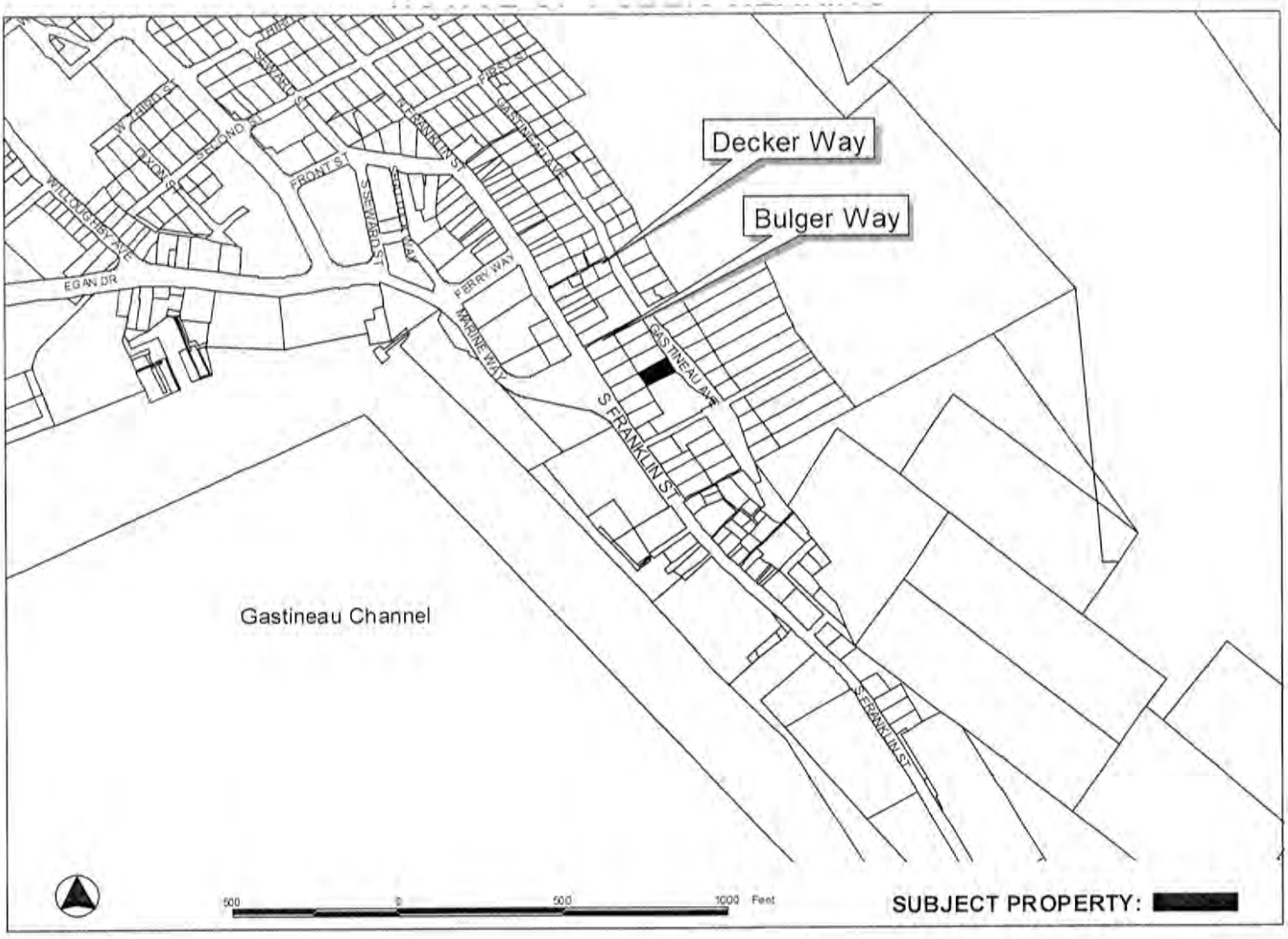

ATTACHMENTS

A – March 8, 2013 Staff report STV2013 0001
B – March 12, 2013 Planning Commission Minutes
C – Letter from Owen Clark and Qualitative Engineering Analysis for Repair of Existing Building Located at 331 Gastineau Avenue, Moore Engineering.
D – Email from Rorie Watt, Director of Engineering
E – Email from Ron King, Chief Regulatory Engineer
F – Email and photos from Ed Foster, Streets Superintendent
G – Email from Charlie Ford, Building Official

The applicant is seeking the vacation of a small portion of Gastineau Avenue. The area of the requested vacation is 49.51 feet wide by 7 feet for a total area of 346.57. This is the area of the foundation and retaining wall that encroach into the right-of-way.

This staff report is supplemental to the March 8, 2013 staff report (Attachment A). In that staff report a complete analysis was made and staff recommended the requested street vacation be denied. The Planning Commission held a public hearing on March 12, 2013. The public hearing was subsequently closed and the Commission then continued the item and requested additional information, which is included in this staff report. Minutes from that Planning Commission meeting are found as Attachment B.

After the March 12, 2013 Planning Commission meeting, representatives from CBJ Engineering, Streets, and Community Development met with the applicant, Owen Clark. It was agreed that Mr. Clark would have an engineering report completed in order to provide needed additional information. That report, completed by Moore Engineering, is found as Attachment C.

The Following are Questions from the Planning Commission (verbatim from March 12, 2013 Minutes)

"Mr. Miller said they need to find out from the agency concerned if they would consider the vacation if a retaining structure was built, and then if the retaining structure was built by Mr. Clark, if it could be tied in with the existing 100 yards of concrete that has been placed at the uphill foundation of the building; also how the design would be handled and CBJ's share of responsibility in fixing the problem. He also alluded to Mr. Clark's statement about pulling the roof off and building up the walls and asked staff is there was an alternative for that."

RESPONSE

Rorie Watt's email from June 27, 2014 addresses this question in depth. In summary, the Moore Engineering report indicates that a retention structure is unnecessary and the Building Official is satisfied with the report. Email from Charlie Ford, Building Official confirms.

RESPONSE

There are no plans to widen the road beyond what is identified in the Comprehensive Plan.

"Mr. Watson referring to Ms. Lawfer's comment regarding widening asked if staff could provide a timeline for that as well. He also queried how quickly the City would fix that street if the applicant withdraws from the right-of-way. He went on to ask what is keeping the City from repairing that street now since it is in dire need of repair."

RESPONSE

Rorie Watt addresses this question in more detail in his email (Attachment D). In summary, the City does not believe the road requires repair at this time. Ed Foster, Streets Superintendent, also states that the road is not failing in this location (Attachment F).

"Mr. Medina questioned if there was any right-of-way on the uphill side."

RESPONSE

Ron King provided an as-built of this section of Gastineau Avenue (Attachment E). It shows the right-of-way to be wider on the eastern end and narrower on the western end. The right-of way width varies in this section of Gastineau Avenue from almost 60 feet (the current right-of-way standard) to approximately 55 feet. There is undeveloped right-of-way on the uphill side of this section of Gastineau Avenue.

"Mr. Miller, "If Mr. Clark did choose to rebuild back onto his own property, would the CBJ accept not having to remove the existing concrete foundation that is in place?"

RESPONSE

Engineering indicates yes (Attachment D).

Additional information for discussion

Since this case was brought before the Planning Commission, the Community Development Department has had discussions with the Department of Law about right-of-way vacations. They have advised that rights-of-way are held by a municipality for the benefit of the public and that vacating such right-of-way is only appropriate when there is a benefit to the public. Furthermore, they have recommended that in addition to the findings showing the vacation meets the requirements of Title 49, an additional finding must be made showing there is a public benefit from the vacation of the right-of-way.

CBJ Streets Superintendent, Ed Foster, submitted additional comments as well as several photos (attachment F). Streets is still opposed to the requested vacation. Debris falls between the building and the street during snow removal. Mr. Foster noted there are boarded up windows below the street that are likely egress windows, which raises a safety concern if the windows were blocked by street snow during an emergency. Mr. Foster adds that if the vacation is

allowed and the building is rebuilt on the existing foundation, that a solid retaining wall be built for at least 2.5 feet of the bottom floor of the structure. He also notes the road is not failing in this location.

Ron King suggests that if the partial right-of-way is approved, that reconstruction of the building include a protective barrier along the street side of the building to stop damage from snow plow operations.

Rorie Watt has indicated that CBJ Codes could be amended so as to allow this property to qualify for a right-of-way encroachment permit. This would preserve the public right-of-way for future needs, while allowing the building to be reconstructed. Mr. Watt does not believe the building location to be "all that objectionable".

This request was evaluated for compliance with the 2008 Comprehensive Plan. Since then the 2013 Comprehensive Plan was adopted. The 2013 Comprehensive Plan recommends (Guidelines and Considerations Subarea 6 #16) "Consider mechanisms to encourage and allow vehicle-less residential development on Gastineau Avenue, that is, uses whose occupants or visitors would travel by walking, bicycling or by public transit." The Plan further recommends (Guidelines and Considerations Subarea 6 #15) an alternative roadway connecting Egan Drive in the downtown to Thane Road. Map M shows the potential location in the vicinity of Gastineau Avenue. These are the same guidelines, recommendations and map as are in the 2008 Comprehensive Plan.

In the March 8, 2013 staff report finding number 3 addresses public health and safety. The suggested finding stated "encroachment limits reconstruction of the retaining wall which is needed to support the roadway" because the Public Works Director indicated this in his memorandum. However, the Engineering report provided by Mr. Clark, as well as both the Engineering Director and Streets Superintendent have subsequently said this is not the case.

FINDINGS (from March 8, 2013 staff report with finding 3 amended)

The Planning Commission shall review the Director's report to consider:

1. Whether the application is complete; and,
2. Whether the development as proposed will comply with the other requirements of this chapter.

The Commission shall adopt the Director's determination on the two items above unless it finds, by a preponderance of the evidence, that the Director's determination was in error, and states its reasoning for each finding with particularity.

Even if the Commission adopts the Director's determination, it may nonetheless deny or condition the street vacation if it concludes, based upon its own independent review of the information submitted at the public hearing, that the street vacation will more probably than not:

1. Materially endanger the public health or safety;
2. Substantially decrease the value of or be out of harmony with property in the neighboring area; or,
3. Not be in general conformity with the comprehensive plan, thoroughfare plan, or other officially adopted plans.

The Director makes the following findings on the proposed development:

1. Is the application for the requested Street Vacation complete?

Yes. We find the application contains the information necessary to conduct full review of the proposed operations. The application submittal by the applicant, including the appropriate fees, substantially conforms to the requirements of CBJ Chapter 49.15.

2. Will the proposed street vacation comply with the other requirements of this chapter?

Yes. The proposed street vacation complies with the other requirements of this chapter. Public notice of this project was provided in the March 1, 2013 and March 11, 2013 and July 11, 2014 and July 21, 2014 issues of the Juneau Empire's "Your Municipality" section, and a Notice of Public Hearing was mailed to all property owners within 500 feet of the subject parcel in March 2013. Moreover, a Public Notice Sign was posted on the subject parcel, visible from the public Right of Way in March 2013.

3. Will the proposed street vacation materially endanger the public health or safety?

Yes. Debris from street snow removal could endanger residents of the lower floor of the rebuilt apartment building by blocking the windows and preventing egress in the event of an emergency.

4. Will the proposed street vacation substantially decrease the value of or be out of harmony with property in the neighboring area?

No. There is no evidence that has been presented that suggests the proposed street vacation will decrease the value or be out of harmony with property in the neighboring area. The building has been in this location at least since 1960.

5. Will the proposed street vacation be in general conformity with the land use plan, thoroughfare plan, or other officially adopted plans?

No. The exact alignment of the future road has not yet been determined and could be located elsewhere. The vacation of the right-of-way will prohibit future installation of sidewalks in this area.

Per CBJ §49.70.900 (b)(3), General Provisions, the Director makes the following Juneau Coastal Management Program consistency determination:

6. Will the proposed street vacation comply with the Juneau Coastal Management Program?

N/A. As discussed above this proposal does not need to go through the Alaska Coastal Management Program review.

Additional Finding as recommended by Law

Will the proposed street vacation provide a benefit to the public?

No. Approving the requested right-of-way vacation will further reduce an already substandard right-of-way. It will prohibit future installation of sidewalks in this area. It may restrict alignment of the future road. It will continue to hamper snow removal operations, which has the potential to impede emergency vehicle response.

RECOMMENDATION

Staff recommends that the Planning Commission adopt the Director's analysis and findings and deny the requested Street Vacation permit.

If the Planning Commission elects to amend the findings and approve the requested vacation, the following conditions are recommended:

1. The owner is required to construct a retention structure to protect the building from debris falling from the roadway.
2. A plat will need to be recorded for the vacation to be completed.
3. The recorded plat will show the AELP utility easement.

MEMORANDUM

CITY/BOROUGH OF JUNEAU
155 South Seward Street, Juneau, Alaska 99801

DATE: March 8, 2013

TO: Planning Commission

FROM: Beth McKibben, Planner
Community Development Department

FILE NO.: STV2013 0001

PROPOSAL: Vacate a portion of Gastineau Ave to allow rebuilding of an 8 plex on existing foundation.

GENERAL INFORMATION

Applicant:	Owen K Clark
Property Owner:	Owen K Clark
Legal Description:	Pacific Coast Addition Block 2 Lot 11
Parcel Code No.:	1-C07-0-H02-011-0
Site Size:	5,000 sq ft
Comprehensive Plan Future Land Use Designation:	MU, Mixed Use
Zoning:	MU, Mixed Use
Utilities:	City water & sewer
Access:	Gastineau Avenue
Existing Land Use:	Vacant
Surrounding Land Use:	Northeast – (MU) Gastineau Ave, vacant Southeast - (MU) Multifamily Northwest - (MU) mixed use –retail/apartments West – (MU) mixed use –retail/apartments

CITY/BOROUGH OF JUNEAU
ALASKA'S CAPITAL CITY

Attachment A

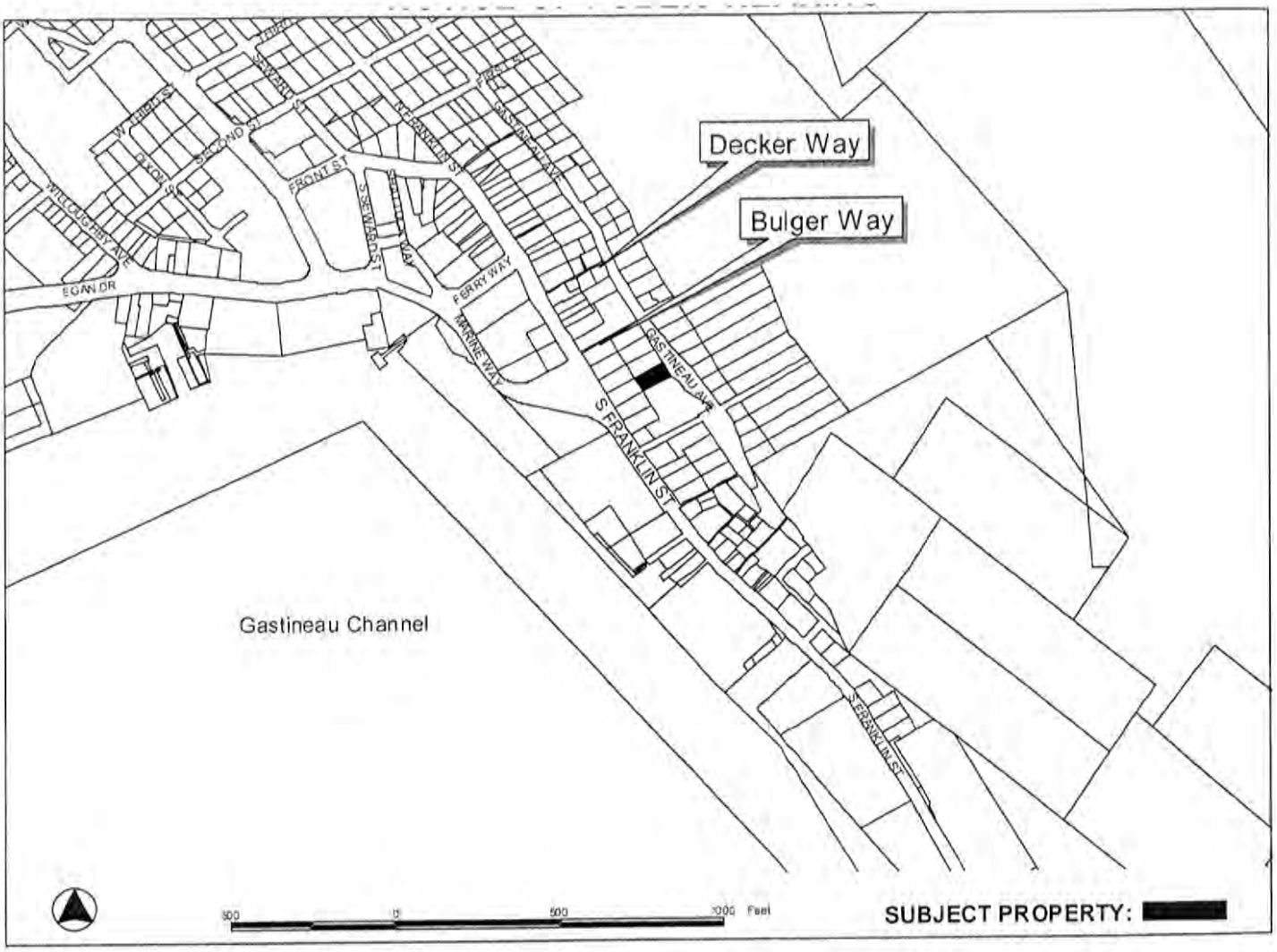
Decker Way
Bulger Way
FRONT ST
S SEWARD ST
FERRY WAY
MARINE WAY
EGAN DR
GASTINEAU AVE
S FRANKLIN ST
Gastineau Channel
500
0
500
1000 Feet
SUBJECT PROPERTY:

ATTACHMENTS

A – Email from Dan Jager, Fire Marshall
B – Memo from Kirk Duncan, Director of Public Works
C – Memo from Ron King, General Engineering
D – Email from Darrell Wetherall, AELP
E – 1978 Memo

BACKGROUND

The applicant is seeking the vacation of a small portion of Gastineau Avenue. The area of the requested vacation is 49.51 feet wide by 7 feet for a total area of 346.57. This is the area of the foundation and retaining wall that encroach into the right-of-way.

This area of town was established many years ago. The earliest plat for the area is from 1886, and the most current is dated 1934. According to information from the Assessor's office an eight unit apartment building was built on this site in 1960. Research of the building files show that it was known the building encroached into Gastineau Avenue. There is a copy of a handwritten memorandum from 1978 about issuing a building permit for work on the building, and that CBJ would not issue an encroachment permit but would allow the building to remain in the right-of-way if the owner signs an agreement to remove the building at such a time as the city needs the right-of-way for street purposes (attachment E). Staff did not find this agreement. In 2000 a building permit was issued for foundation repair. In April 2007 the building caught fire and was severely damaged.

The applicant is seeking the street vacation in order to eliminate the encroachment into the right-of-way. Eliminating the encroachment will allow the property owner to rebuild on the existing foundation that was substantially rebuilt in 2000. The lot in its current configuration is 5,000 square feet, which meets the minimum lot size requirements for the MU zoning district. There are no setback requirements in this district.

Water Utility and Waste Water Utility have no comments.

The Fire Marshall has commented that as long as the requested vacation will not affect apparatus access or turn around then they are ok with the proposal. If requested street vacation will narrow the road at all then they are not in favor of this (attachment A). Staff notes the applicant is seeking to vacate a portion of the right-of-way and that the constructed road will remain as it is, without any changes.

Street Department has recommended the vacation not be approved (attachment B). They note the retaining wall is not supporting the roadway and needs to be rebuilt. The encroachment limits reconstruction. They also state the encroachment impedes snow removal, and snow from passing plows could endanger the building and lower level residents, and that the narrow

roadway limits fire response. CBJ Streets Department would like to see the building reconstructed on private property and all encroachments removed.

General Engineering's concerns regarding the retaining wall, snow removal are similar to Streets (attachment C). General Engineering also noted it would be best if the building was reconstructed on private property and all encroachments into the right-of-way removed. General Engineering recommends that if the vacation is approved, the owner be required to construct a retention structure to protect the building from debris falling from the roadway, and that granting the right-of-way vacation without requiring debris catchment and proper lateral support to the roadway is unacceptable.

AELP indicates that they have an overhead transmission and distribution line running through the CBJ ROW within that 7 foot area requested to be vacated. (attachment D). AELP needs their interests protected in any transfer of ownership of this additional 7 feet. AELP did not find any easement in their GIS or easement database, and they are not sure it was permitted through CBJ ROW either. The line most likely pre-dates the current processes. There may be informal prescriptive easements and/or grandfathered utility permits.

AELP indicates they are not necessarily opposed to vacating this ROW, but if vacated, a recorded plat should show that this is utility easement and/or a written easement to the utilities needs to be given.

ANALYSIS

Zoning- The lot is located in the MU (Mixed Use) zoning district. The lot meets the minimum lot size for the district and will exceed it if the vacation is approved. The lot does not meet the minimum lot width, but is legally non-conforming because it was platted before zoning. The MU zoning district has no setback requirements. Rebuilding, on the existing foundation, if the encroachment is eliminated, will comply with setbacks.

According to the Land Use Code, street vacations shall be processed per CBJ § 49.15.450(1)(A-F) with a petition signed by the majority of owners fronting the ROW being vacated. In this case the only property that fronts the portion of the requested to be vacated is the applicant. Public notice is required per CBJ § 49.15.230, and if less than 5 lots are involved it is platted through the minor subdivision process. If this street vacation is approved, the applicant will be required to apply for a minor subdivision permit for platting review.

Drainage- Staff has not been made aware of any drainage issues or concerns. There has been a building in this location since at least the 1960s and the infrastructure has been installed to accommodate it.

Access- Gastineau Avenue is a narrow winding street. With parking on the street there is not enough room for two vehicles to pass. The as-built submitted with the vacation application is unclear as to what the width of the right-of-way is. It does show the road way to 24 feet wide and 20 feet wide in front of this foundation. The current standard for rights-of –way is 60 feet wide.

Traffic Analysis- Gastineau Avenue, as an improved road, ends not far beyond this site. This vacation request, if approved, will not change any current function of Gastineau. However, rebuilding at this site has the potential to increase traffic by adding residential units to the area. It will, however, if the building is reconstructed in a similar configuration to what existed previously, be returning to a level similar to what existed before the building burned down in 2007. However, the MU has no maximum density so there is potential for much higher future traffic in this area, from nearby developments, or if this building was rebuilt with more units than it had originally.

Pedestrian Access- There are no sidewalks in this area. Pedestrians must walk in the road way. The retaining wall and foundation have been in in this location for many years. Allowing the vacation of this portion of Gastineau Avenue will not change current pedestrian access. It will, however, reduce options for installing sidewalks in the future.

Public Health and Safety- The encroachment has been in place since at least 1960 (it is unclear if this is the original construction date or if the original construction date is earlier). The building was used as an eight unit apartment until it burned in 2007. The current street and other modern infrastructure have been installed around the building. If the requested street vacation is approved the applicant will then be able to reconstruct the building on the existing foundation. The reconstruction of the building will eliminate an attractive nuisance from the neighborhood, improve safety and add more residential units to the community. The CBJ Streets Department has indicated that the encroachment impedes snow removal and fire response. Furthermore, the encroachment limits reconstruction of the retaining wall, which is necessary to support the roadway.

Compliance with Adopted Plans- The 2008 Comprehensive Plan recommends (Guidelines and Considerations Subarea 6 #16) "Consider mechanisms to encourage and allow vehicle-less residential development on Gastineau Avenue, that is, uses whose occupants or visitors would travel by walking, bicycling or by public transit." The Plan further recommends (Guidelines and Considerations Subarea 6 #15) an alternative roadway connecting Egan Drive in downtown to Thane Road. Map M shows the potential location in the vicinity of Gastineau Avenue. Staff checked with General Engineering and Map M is what is referred to in their comments about the Comprehensive Plan.

2001 Area Wide Transportation Plan (AWTP) addresses a 20-year transportation framework and provides solutions for transportation problems throughout the borough. In discussing the

"Downtown/Thane Deficiencies" the plan states that in the Downtown/Thane sub-area, the forecast transportation issues relate to pedestrian circulation and capacity, auto capacity, parking, transit service, and circulation for heavy vehicles and tour buses. The plan recommends considering extending Gastineau Avenue to connect with Thane Road to promote system redundancy.

49.70.900-49.70.1097 COASTAL DEVELOPMENT, HABITAT, AND WETLANDS

N/A. This Street Vacation proposal will not affect wetlands or sensitive habitat.

FINDINGS

The Planning Commission shall review the Director's report to consider:

1. Whether the application is complete; and,
2. Whether the development as proposed will comply with the other requirements of this chapter.

The Commission shall adopt the Director's determination on the two items above unless it finds, by a preponderance of the evidence, that the Director's determination was in error, and states its reasoning for each finding with particularity.

Even if the Commission adopts the Director's determination, it may nonetheless deny or condition the street vacation if it concludes, based upon its own independent review of the information submitted at the public hearing, that the street vacation will more probably than not:

1. Materially endanger the public health or safety;
2. Substantially decrease the value of or be out of harmony with property in the neighboring area; or,
3. Not be in general conformity with the comprehensive plan, thoroughfare plan, or other officially adopted plans.

The Director makes the following findings on the proposed development:

1. Is the application for the requested Street Vacation complete?

Yes. We find the application contains the information necessary to conduct full review of the proposed operations. The application submittal by the applicant, including the appropriate fees, substantially conforms to the requirements of CBJ Chapter 49.15.

2. Will the proposed street vacation comply with the other requirements of this chapter?

Yes. The proposed street vacation complies with the other requirements of this chapter. Public notice of this project was provided in the March 1st and March 11th issues of the Juneau Empire's "Your Municipality" section, and a Notice of Public Hearing was mailed to all property owners within 500 feet of the subject parcel. Moreover, a Public Notice Sign was posted on the subject parcel, visible from the public Right of Way.

3. Will the proposed street vacation materially endanger the public health or safety?

Yes. As discussed above, the encroachment limits reconstruction of the retaining wall which is needed to support the roadway.

4. Will the proposed street vacation substantially decrease the value of or be out of harmony with property in the neighboring area?

No. There is no evidence that has been presented that suggests the proposed street vacation will decrease the value or be out of harmony with property in the neighboring area. The building has been in this location at least since 1960.

5. Will the proposed street vacation be in general conformity with the land use plan, thoroughfare plan, or other officially adopted plans?

No. Approving the encroachment will allow reconstruction of a multi-family building which will likely have inhabitants that are without vehicles. The exact alignment of the future road has not yet be determined and could be located elsewhere. The vacation of the right-of-way will prohibit future installation of sidewalks in this area.

Per CBJ §49.70.900 (b)(3), General Provisions, the Director makes the following Juneau Coastal Management Program consistency determination:

6. Will the proposed street vacation comply with the Juneau Coastal Management Program?

N/A. As discussed above this proposal does not need to go through the Alaska Coastal Management Program review.

RECOMMENDATION

We recommend that the Planning Commission adopt the Director's analysis and findings and deny the requested Street Vacation permit.

If the Planning Commission elects to amend the findings and approve the requested vacation the following conditions are recommended:

1. The owner is required to construct a retention structure to protect the building from debris falling from the roadway.
2. A plat will need to be recorded for the vacation to be completed.
3. The recorded plat will show the AELP utility easement.

Rescheduled from February 26, 2013 to March 12, 2013

NOTICE OF PUBLIC HEARING

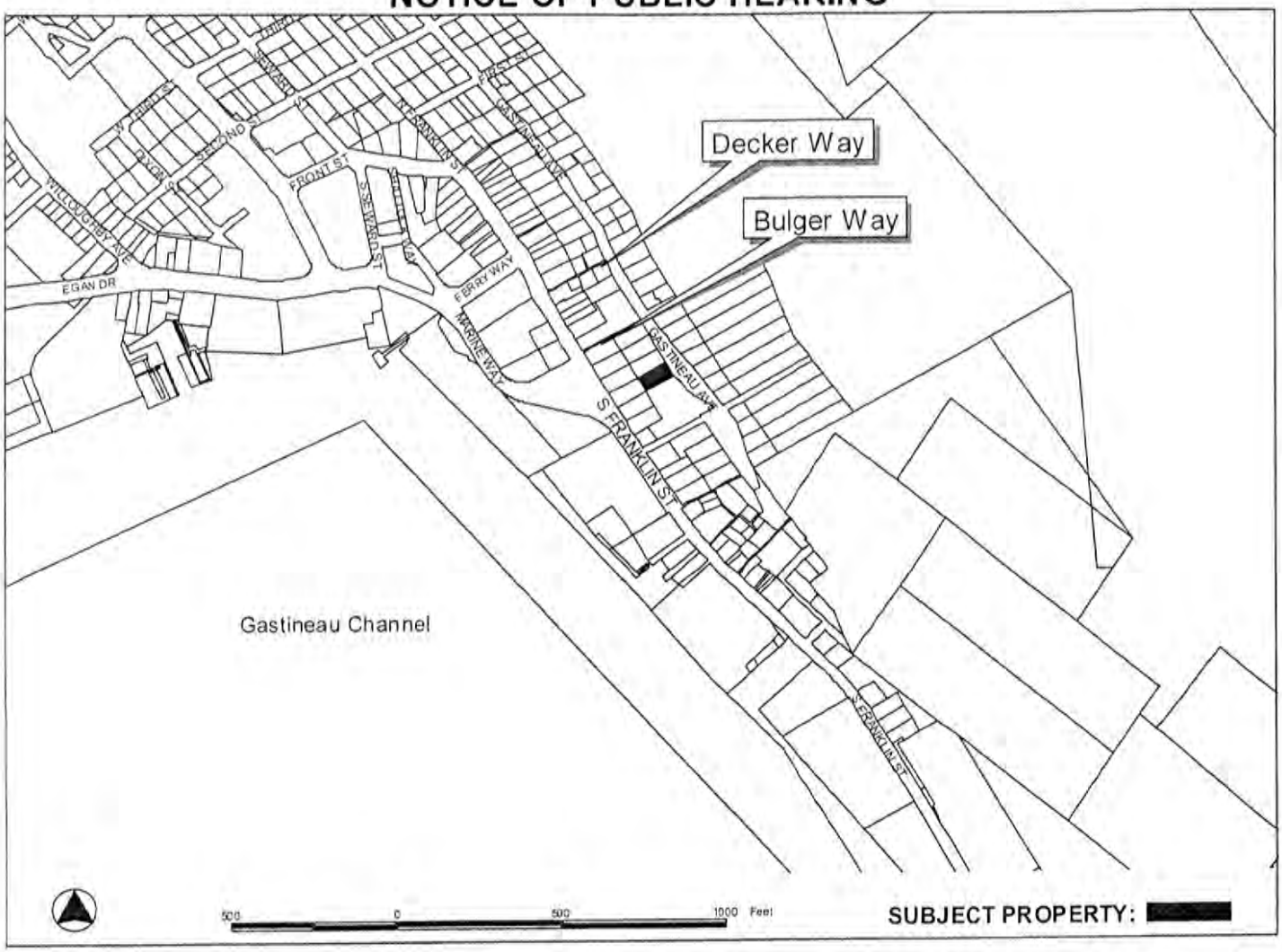

PROPOSAL: Vacate approximately 346.6 sq ft of Gastineau Avenue.

FILE NO:	STV2013 0001	**APPLICANT:**	OWEN K CLARK; KAMI S CLARK
TO:	**Adjacent Property Owners**	**Property PCN:**	1-C07-0-H02-011-0
HEARING DATE:	March 12, 2013	**Size:**	5000 sqft
HEARING TIME:	7:00 PM	**Zoned:**	MU
PLACE:	**ASSEMBLY CHAMBERS** Municipal Building 155 South Seward St Juneau, Alaska 99801	**Owners:**	OWEN K CLARK & KAMI S CLARK
		Site Address:	331 GASTINEAU AVE
		Accessed via:	GASTINEAU AVE

PROPERTY OWNERS PLEASE NOTE:

You are invited to attend this Public Hearing and present oral testimony. The Planning Commission will also consider written testimony. You are encouraged to submit written material to the Community Development Department no later than 8:30 A.M. on the Wednesday preceding the Public Hearing. Materials received by this deadline are included in the information packet given to the Planning Commission a few days before the Public Hearing. Written material received after the deadline will be provided to the Planning Commission at the Public Hearing.

If you have questions, please contact Beth McKibben at beth_mckibben@ci.juneau.ak.us or at 586-0465.

Planning Commission Agendas, Staff Reports and Meeting Results can be viewed at www.juneau.org/plancomm.

Date notice was printed: February 26, 2013

Postponed: Tentative Reschedule Date is Tuesday, March 12, 2013 at 7:00pm

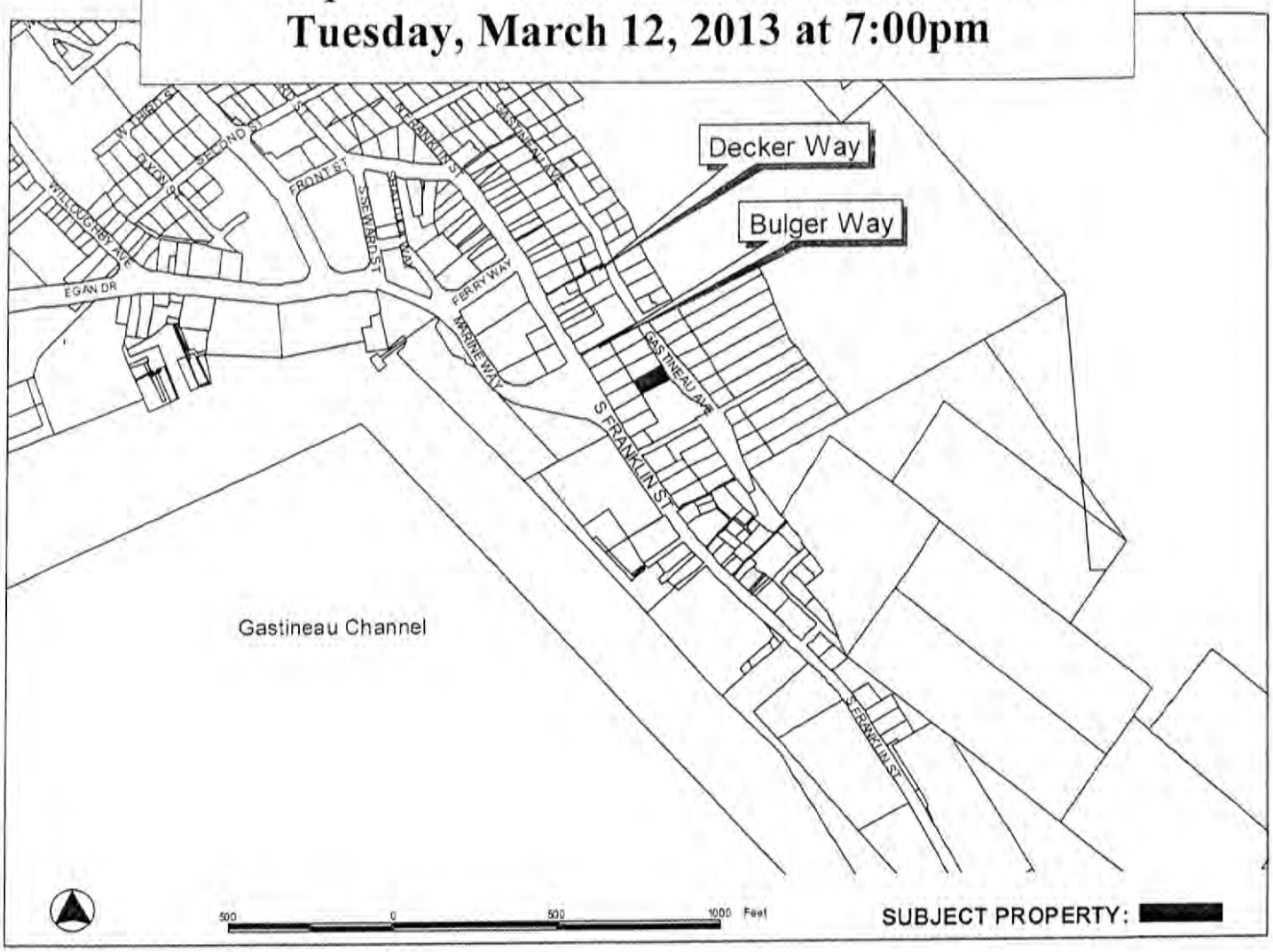

PROPOSAL: Vacate approximately 346.6 sq ft of Gastineau Avenue.

FILE NO:	STV2013 0001	**APPLICANT:**	OWEN K CLARK; KAMI S CLARK
TO:	**Adjacent Property Owners**	**Property PCN:**	1-C07-0-H02-011-0
HEARING DATE:	Feb 26, 2013	**Size:**	5000 sqft
HEARING TIME:	7:00 PM	**Zoned:**	MU
PLACE:	**ASSEMBLY CHAMBERS** Municipal Building 155 South Seward St Juneau, Alaska 99801	**Owners:**	OWEN K CLARK & KAMI S CLARK
		Site Address:	331 GASTINEAU AVE
		Accessed via:	GASTINEAU AVE

PROPERTY OWNERS PLEASE NOTE:

You are invited to attend this Public Hearing and present oral testimony. The Planning Commission will also consider written testimony. You are encouraged to submit written material to the Community Development Department no later than 8:30 A.M. on the Wednesday preceding the Public Hearing. Materials received by this deadline are included in the information packet given to the Planning Commission a few days before the Public Hearing. Written material received after the deadline will be provided to the Planning Commission at the Public Hearing.

If you have questions, please contact Beth McKibben at beth_mckibben@ci.juneau.ak.us or at 586-0465.

Planning Commission Agendas, Staff Reports and Meeting Results can be viewed at www.juneau.org/plancomm.

Date notice was printed: February 12, 2013

NOTICE OF PUBLIC HEARING

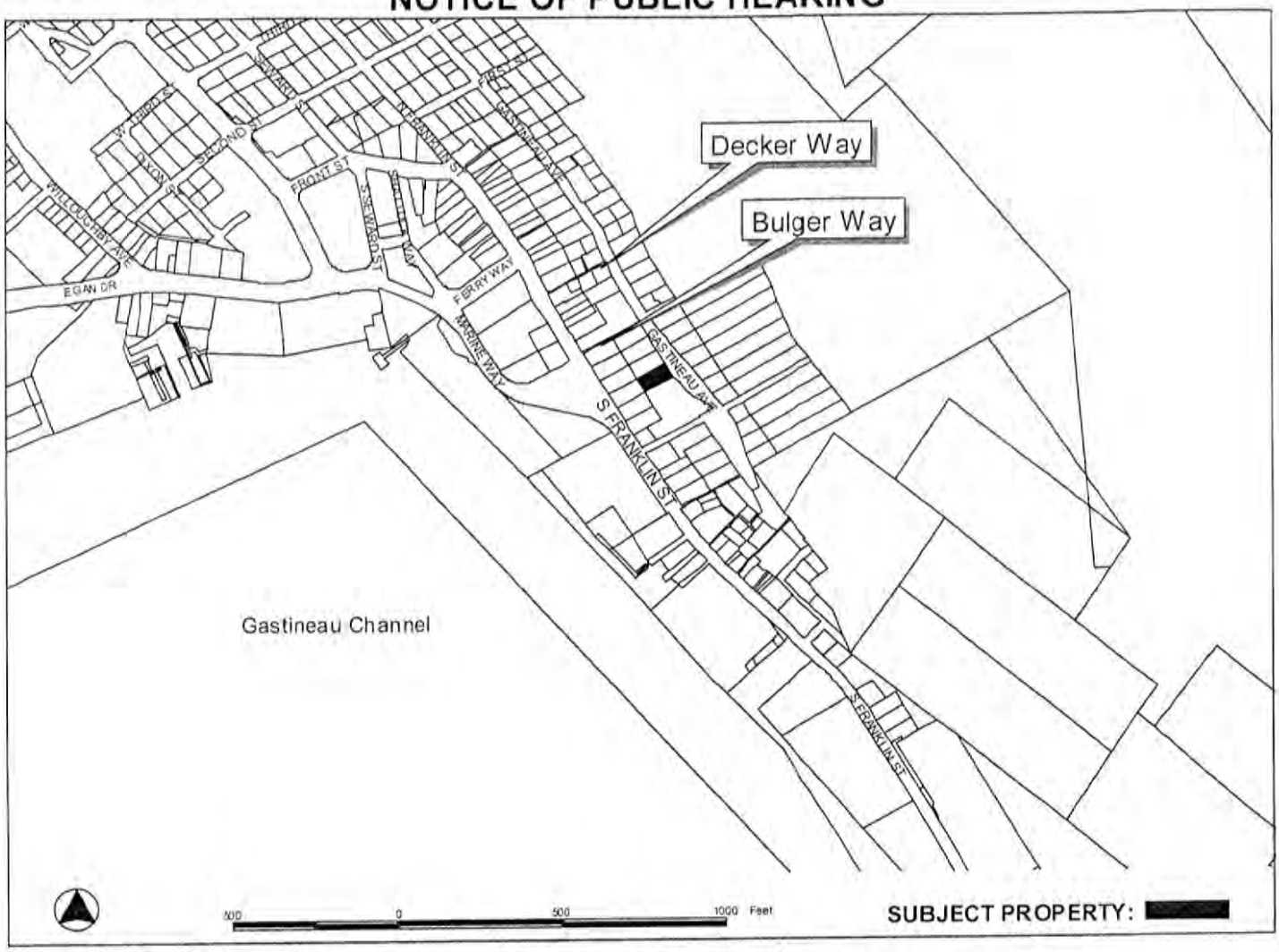

PROPOSAL: Vacate approximately 346.6 sq ft of Gastineau Avenue.

FILE NO:	STV2013 0001	**APPLICANT:**	OWEN K CLARK; KAMI S CLARK
TO:	**Adjacent Property Owners**	**Property PCN:**	1-C07-0-H02-011-0
HEARING DATE:	Feb 26, 2013	**Size:**	5000 sqft
HEARING TIME:	7:00 PM	**Zoned:**	MU
PLACE:	**ASSEMBLY CHAMBERS** Municipal Building 155 South Seward St Juneau, Alaska 99801	**Owners:**	OWEN K CLARK & KAMI S CLARK
		Site Address:	331 GASTINEAU AVE
		Accessed via:	GASTINEAU AVE

PROPERTY OWNERS PLEASE NOTE:

You are invited to attend this Public Hearing and present oral testimony. The Planning Commission will also consider written testimony. You are encouraged to submit written material to the Community Development Department no later than 8:30 A.M. on the Wednesday preceding the Public Hearing. Materials received by this deadline are included in the information packet given to the Planning Commission a few days before the Public Hearing. Written material received after the deadline will be provided to the Planning Commission at the Public Hearing.

If you have questions, please contact Beth McKibben at beth_mckibben@ci.juneau.ak.us or at 586-0465.

Planning Commission Agendas, Staff Reports and Meeting Results can be viewed at www.juneau.org/plancomm.

Date notice was printed: February 12, 2013

DEVELOPMENT PERMIT APPLICATION

Project Number	CITY and BOROUGH of JUNEAU	Date Received: 1/16/13
Project Name (City Staff to Assign Name)		

INFORMATION

Project Description: Rebuild Building At 331 Gastineau Ave. That was Damaged By Fire.

PROPERTY LOCATION

Street Address: 331 Gastineau Ave. City/Zip: Juneau, AK, 99801

Legal Description(s) of Parcel(s) (Subdivision, Survey, Block, Tract, Lot): Pacific Coast Block 2 Lot 11

Assessor's Parcel Number(s):

PROJECT / APPLICANT

LANDOWNER/ LESSEE

Property Owner's Name: Owen & Kami Clark

Contact Person: Owen

Work Phone: 321-0258

Mailing Address: 1775 Dimond Dr. Juneau, AK,

Home Phone: 321-0258

Fax Number: N/A

E-mail Address:

Other Contact Phone Number(s):

LANDOWNER/ LESSEE CONSENT ***Required for Planning Permits, not needed on Building/ Engineering Permits***

I am (we are) the owner(s)or lessee(s) of the property subject to this application and I (we) consent as follows:

A. This application for a land use or activity review for development on my (our) property is made with my complete understanding and permission.

B. I (we) grant permission for officials and employees of the City and Borough of Juneau to inspect my property as needed for purposes of this application.

X Owen Clark owner — Landowner/Lessee Signature — Date: 1-15-13

X — Landowner/Lessee Signature — Date:

NOTICE: The City and Borough of Juneau staff may need access to the subject property during regular business hours and will attempt to contact the landowner in addition to the formal consent given above. Further, members of the Planning Commission may visit the property before the scheduled public hearing date.

APPLICANT If the same as OWNER, write "SAME" and sign and date at X below.

Applicant's Name: SAME

Contact Person:

Work Phone:

Mailing Address:

Home Phone:

Fax Number:

E-mail Address:

Other Contact Phone Number(s):

X Owen Clark — Applicant's Signature — Date of Application: 1-15-13

STAFF APPROVALS

OFFICE USE ONLY BELOW THIS LINE

✔	Permit Type	Fee	Date Received	Application Number(s)
	Building/Grading Permit			
	City/State Project Review and City Land Action			
	Inquiry Case (Fee In Lieu, Letter of ZC, Use Not Listed)			
	Mining Case (Small, Large, Rural, Extraction, Exploration)			
	Sign Approval (If more than one, fill in all applicable permit #'s)			
X	Subdivision (Minor, Major, PUD, St. Vacation, St. Name Change)		1/16/13	STV-13-001
	Use Approval (Allowable, Conditional, Cottage Housing, Mobile Home Parks, Accessory Apartment)			
	Variance Case (De Minimis and all other Variance case types)			
	Wetlands Permits			
	Zone Change Application			
	Other (Describe)			

***Public Notice Sign Form filled out and in the file.

Comments:

Permit Intake Initials: GPC

NOTE: DEVELOPMENT PERMIT APPLICATION FORMS MUST ACCOMPANY ALL OTHER COMMUNITY DEVELOPMENT DEPARTMENT APPLICATIONS

STREET VACATION APPLICATION

Please attach a cover letter to fully explain the project if there is not adequate space on this form.

Project Number	Project Name (15 characters)	Case Number	Date Received
		STV 13-01	1/16/13

NAME OF RIGHT-OF-WAY TO BE VACATED: 8331 Gastineau Ave. Road Front

Dimensions of right-of-way to be vacated:

Width 7 feet Length 49.51 feet

Total Area 350 square feet Total length of parcel lot lines fronting the right-of-way 49.51 feet

DESCRIBE THE REASON(S) FOR THE STREET VACATION:

to Be ABLe to Rebuild OFF existing C.B.J. Approved Foundation, An 8 PLex that was Damanged IN Fire.

EXISTING USE OF SUBJECT RIGHT-OF-WAY:

~~The~~ ~~Same~~ Holding The Foundation For Fire Damanged 8 PLex Building.

PROPOSED USE OF SUBJECT RIGHT-OF-WAY:

SAME AS Above. to Be ABLe for Rebuild Fire Damanged 8 PLex APt. OFF existing ~~Approved~~ C.B.J. Foundation

TO BE COMPLETED BY THE APPLICANT

APPLICANTS PLEASE NOTE:

Attached is a petition that must be completely filled out in order for the application to be complete. If any information is missing on the petition, the application will not be reviewed by Community Development Staff or scheduled for a Public Hearing.

If the property owners involved in the petition do not own at least 50% of all property fronting the Right-of-Way to be vacated, the application will not be accepted.

For more information regarding the permitting process and the submittals required for a complete application, please see the reverse side.

If you need any assistance filling out this form, please contact the Permit Center at 586-0770.

SUBDIVISION/PLATTING FEES

	Fees	Check No.	Receipt	Date
Application Fees	$ 500.00			
Pub. Not. Sign Fee	$ 50			
Pub. Not. Sign Deposit	$ 100			
Total Fee	$ 650	015878	CRd 3281	1/16/13

NOTE: MUST BE ACCOMPANIED BY* DEVELOPMENT PERMIT APPLICATION *FORM

Revised March 17, 2011- I:\FORMS\Applications

PROPER, / OWNERS ADJACENT TO PROPERTY TO BE ,ACATED

I am (we are) the owner(s) of the property subject to this application and I (we) consent as follows:

A. This application for a Street Vacation review adjacent to my (our) property is made with my (our) complete understanding and permission.

B. I (we) grant permission for officials and employees of the City and Borough of Juneau to inspect my property as needed for purposes of this application.

Landowner's Signature	Landowner's Name (Printed)	Street Address	Length of Frontage Along Right-of-Way	Percentage of Total Frontage
Total Percent of Frontage along Right-of-Way Proposed to be Vacated by this Petition				

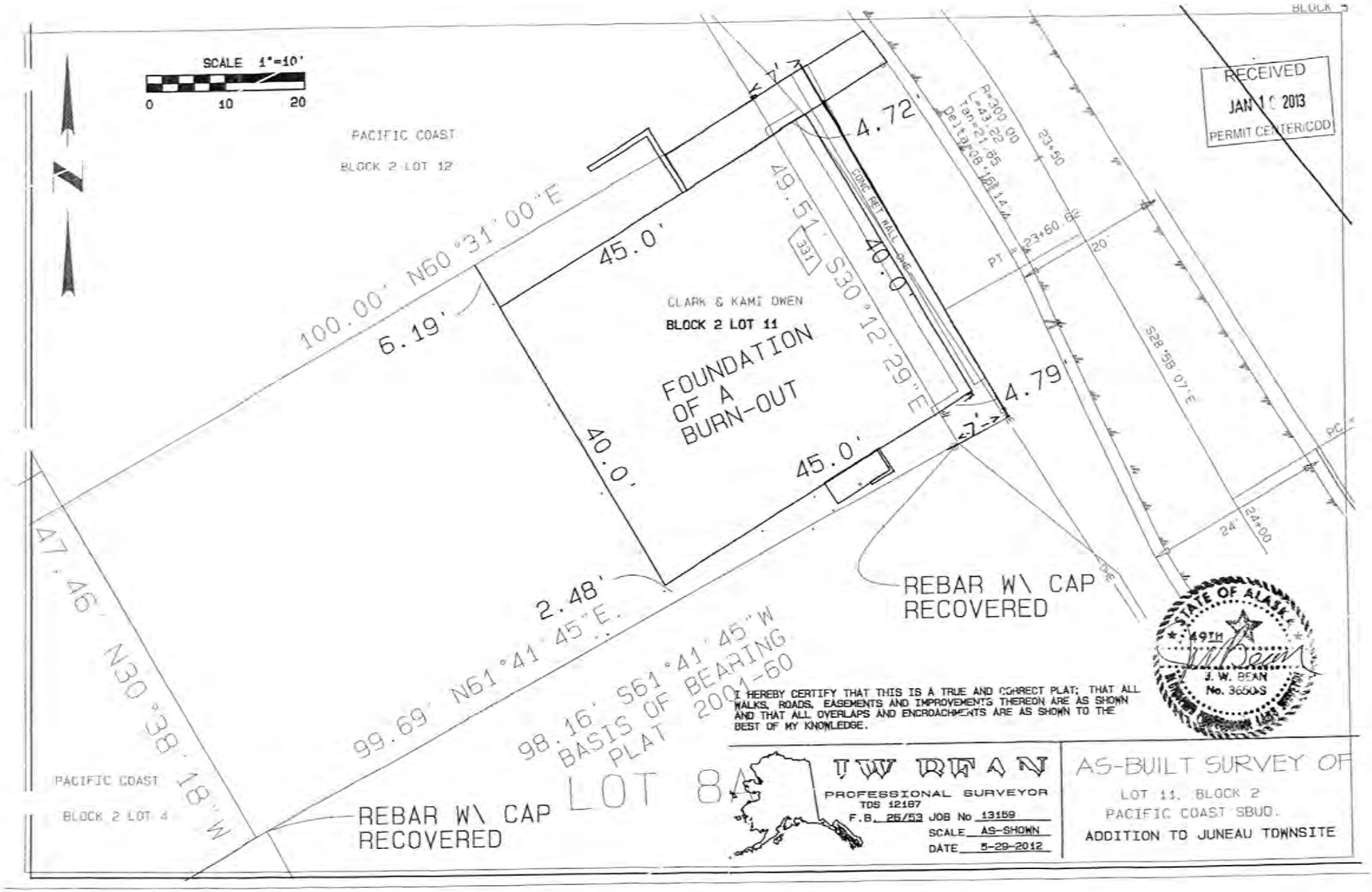
SCALE 1"=10'
0 10 20
N
PACIFIC COAST
BLOCK 2 LOT 12
100.00' N60°31'00"E
6.19'
45.0'
40.0'
CLARK & KAMI OWEN
BLOCK 2 LOT 11
FOUNDATION OF A BURN-OUT
49.51' S30°12'29"E
331
CONC RET WALL ONLY
40.0'
45.0'
4.72
4.79
7'
7'
R=300.00
L=43.22
Tan=21.65
Delta=08.15.14
23+50
23+60.62
PT
20'
S28°58'07"E
PC
24'
24+00
REBAR W\ CAP RECOVERED
2.48'
99.69' N61°41'45"E.
98.16' S61°41'45"W
BASIS OF BEARING
PLAT 2001-60
LOT 8A
47.46' N30°38'18"W
PACIFIC COAST
BLOCK 2 LOT 4
REBAR W\ CAP RECOVERED
BLOCK 3
RECEIVED
JAN 1 0 2013
PERMIT CENTER/CDD
STATE OF ALASKA
49TH
J. W. BEAN
No. 3650S
I HEREBY CERTIFY THAT THIS IS A TRUE AND CORRECT PLAT; THAT ALL WALKS, ROADS, EASEMENTS AND IMPROVEMENTS THEREON ARE AS SHOWN AND THAT ALL OVERLAPS AND ENCROACHMENTS ARE AS SHOWN TO THE BEST OF MY KNOWLEDGE.
JW BEAN
PROFESSIONAL SURVEYOR
TDS 12187
F.B. 26/53 JOB No 13159
SCALE AS-SHOWN
DATE 5-29-2012
AS-BUILT SURVEY OF
LOT 11, BLOCK 2
PACIFIC COAST SBDD.
ADDITION TO JUNEAU TOWNSITE

Beth McKibben

From: Dan Jager
Sent: Tuesday, March 05, 2013 3:51 PM
To: Beth McKibben
Subject: Re: review requested....STV2013 0001- 346.6 sq ft of Gastineau Ave

As long as this will not effect apparatus access or turn around then we are ok. If this will narrow the road at all then we are not in favor of this.
Dan

Sent from my iPhone

On Mar 5, 2013, at 12:46 PM, "Beth McKibben" <Beth_McKibben@ci.juneau.ak.us> wrote:

Dan

I don't have final comments from you. Streets comments include that the dead end street doesn't allow for fire apparatus to turn around.

The vacation is to allow the existing foundation to stay. I need to finish up ASAP. Thanks

---

From: Dan Jager
Sent: Friday, February 01, 2013 4:41 PM
To: Beth McKibben
Subject: RE: review requested....STV2013 0001- 346.6 sq ft of Gastineau Ave

Beth, what exactly are they wanting vacated? If it is to reduce the width of the street, we can not support that. I wasn't sure if it was vacating the street part or the land next to the street. Thanks.
Dan

From: Beth McKibben
Sent: Thursday, January 31, 2013 4:16 PM
To: Ron King; Ed Foster; Heather Marlow; Brent Fischer; John Kern; Dan Jager; "Timothy, Jackie L (DFG)' (jackie.timothy@alaska.gov)'; 'Steve_Brockmann@fws.gov'; Charlie Ford; Dave Crabtree; Tom Trego; 'Good, Sheila D (DOT) (sheila.good@alaska.gov)'; "Epstein, David B (DOT)' (david.epstein@alaska.gov)'; 'Sally Wanstall, DEC (sally.wanstall@alaska.gov)'
Subject: review requested....STV2013 0001- 346.6 sq ft of Gastineau Ave

Please review the attached information and return any comments/questions/concerns you might have by Friday February 15.

The applicant is request to vacate a portion of Gastineau Avenue in order to allow an existing foundation to remain.

Beth McKibben, AICP
Senior Planner, CDD
City & Borough of Juneau
(907)586-0465 phone
(907)5863365 FAX

Please consider the environment before printing this email.

Attachment A

MEMORANDUM

CITY/BOROUGH OF JUNEAU
155 South Seward Street, Juneau, Alaska 99801

TO: Beth Mckibben, CDD

DATE: February 26, 2013

FROM: Kirk Duncan, CBJ Public Works Department

FILE: STV20130001

GASTINEAU AVENUE STREET VACATION REQUEST

Ed Foster and Kit Watts, CBJ Street Department conducted a site visit today to determine the impact of the requested vacation of a portion of Gastineau Ave.

The existing wall between the structure and the building is failing providing little support to Gastineau Ave. The existing roadway is very narrow, in danger of failing and the curb is being undermined. The street needs to be reconstructed but the building encroachment into the Gastineau Ave right of way aligns as a major issue that limits reconstruction and blocks any future widening.

Due to the encroachment of the building the snow removal operations are severely hampered. The possibility of snow rolling down the bank onto the building is dangerous for anyone living below street level. The possibility of damage to the building and windows below the street side requires extensive maneuvering by the CBJ Street Department to protect life and property below the road.

The Comprehensive Plan delineates the future extension and widening of Gastineau Ave. The existing dead end does not allow the fire apparatus to turn around and the narrow roadway limits fire response time and effort.

Attachment B

The CBJ Public Works Department would prefer the vacation of Gastineau be **DENIED.**

Finally, the Street Department would like to see the building reconstructed on private property and remove all right of way encroachments.

MEMORANDUM

CITY/BOROUGH OF JUNEAU
155 South Seward Street, Juneau, Alaska 99801

TO: Beth Mckibben, CDD

DATE: March 4, 2013

FROM: Ron King, General Engineering

FILE: STV20130001

GASTINEAU AVENUE STREET VACATION REQUEST

I conducted a site visit with Ed Foster and Kit Watts, CBJ Street Department to determine the impact of the requested vacation of a portion of Gastineau Ave.

The existing wall between the structure and the building on Gastineau Ave is failing. The wall, within the right-of-way, cuts into the hillside at the building foundation level below the road. As constructed the failing wall provides very little lateral support to the roadway.

Gastineau Avenue is very narrow and the curb is being undermined at the northerly limits of this property. The existing encroachment into the Gastineau Ave right of way already aligns as a major issue that limits reconstruction and blocks any future widening.

Due to the encroachment of the building and the narrow right of way limits, the snow removal operations are severely hampered. The possibility of snow rolling down the bank onto the building is a problem for anyone living below street level. The possibility of damage to the building and windows below the street side requires extensive maneuvering by the CBJ Street Department to protect life and property below the road.

The Comprehensive Plan delineates the future extension and widening of Gastineau Ave. The existing dead end does not allow the fire apparatus to turn around and the narrow roadway limits fire response time and effort.

It is the combined opinion of Streets and Engineering that it would be best for the building to be reconstructed on private property and remove all right of way encroachments.

If the building is to remain in the current location and right-of-way is vacated, then the owner should be required to construct a retention structure that would protect the building from debris falling from the roadway. Currently, there is no break in the slope from the road to the building. Granting a vacation without requiring debris catchment and proper lateral support to the roadway is unacceptable.

Attachment C

Beth McKibben

From: Darrell Wetherall <Darrell.Wetherall@aelp.com>
Sent: Tuesday, February 19, 2013 3:59 PM
To: Beth McKibben
Subject: RE: review requested....STV2013 0001- 346.6 sq ft of Gastineau Ave
Attachments: 331GastineauAve.jpg

We have a transmission and distribution line running through the CBJ ROW within that 7' vacation area identified in your drawing. Our facility is shown as OHE. See photo attached. We need our interests protected in any transfer of ownership of this additional 7'. I don't see any kind of easement in our GIS or easement database, and I'm not sure it was permitted under CBJ ROW either. I'm sure the line pre-dates much of our current processes. There would be informal prescriptive easements and/or grandfathered utility permits I would think unless CBJ has some historic documentation.

We are not necessarily opposed to vacating this ROW, but if vacated, a recorded plat should show that this is utility easement and/or a written easement to the utilities needs to be given.

Also, secondary to the vacation request, probably part of building permit review, any new structure must maintain NESC clearances (separation) from the power lines.

Darrell Wetherall
Assistant Transmission & Distribution Engineer
Alaska Electric Light & Power
5601 Tonsgard Court
Juneau, AK 99801
(907) 463-6316 Office
(907) 723-2602 Cell
(907) 463-4833 Fax
Darrell.Wetherall@aelp.com

From: Beth McKibben [mailto:Beth_McKibben@ci.juneau.ak.us]
Sent: Tuesday, February 19, 2013 2:32 PM
To: Ed Foster; Tom Trego; Dave Crabtree; Darrell Wetherall
Subject: FW: review requested....STV2013 0001- 346.6 sq ft of Gastineau Ave

Ed, Tom and Dave

I need to finish up my staff report and I don't see that I have any comments from any of you about the proposed ROW vacation. If you could take a minute and look it over I would very much appreciate it.

Darrell – I didn't send this to you the first time. If could take a look it would be great. I do need to finish up in the next couple days so ASAP. Should we include you in our request for agency review? Thanks!

From: Beth McKibben
Sent: Thursday, January 31, 2013 4:16 PM
To: Ron King; Ed Foster; Heather Marlow; Brent Fischer; John Kern; Dan Jager; "Timothy, Jackie L (DFG)' (jackie.timothy@alaska.gov)'; 'Steve_Brockmann@fws.gov'; Charlie Ford; Dave Crabtree; Tom Trego; 'Good, Sheila D (DOT) (sheila.good@alaska.gov)'; "Epstein, David B (DOT)' (david.epstein@alaska.gov)'; 'Sally Wanstall, DEC (sally.wanstall@alaska.gov)'
Subject: review requested....STV2013 0001- 346.6 sq ft of Gastineau Ave

Attachment D

Attachment E

CJ-103

CITY & BOROUGH OF JUNEAU

1[illegible] SO. SEWARD ST. JUNEAU, ALASKA [illegible]901

TO: Art Morrison / Cons. Mgr. SUBJECT: F&L Apts. - Gastineau Ave.

FROM: THE OFFICE OF THE DATE: 6-23-78

MESSAGE:

Rae Gulon will [illegible] a bldg. permit [illegible] additional [illegible] on the apt. bldg. in the Rdt. [illegible] Apts. [illegible] [illegible] to [illegible] the [illegible] and [illegible] and [illegible] action will be taken.

Mrs. Page's rep. atty., [illegible] on the City will not [illegible] an encroachment permit but would allow the bldg. to remain on the ROW if the owner signs an encroachment to remove the bldg. at such time the City needs the ROW for street purposes. Mrs. Page [illegible] to expire that the stairway and ramp may be treated as a driveway and a permit could be issued for their construction.

PLEASE REPLY IN AREA BELOW SIGNED: Terry Bremner

REPLY:

REPLY DATE: SIGNED:

MOTION: *by Mr. Watson to accept AAP2013 0004 with staff's findings and recommendations and asked for unanimous consent.*

Chair Satre asked if there was any objection to or discussion on the motion.

Mr. Medina clarified that he was voting against the project just to be consistent with his vote on the text amendment.

Roll Call Vote
Ayes: Lawfer, Bishop, Haight, Bennett, Grewe, Miller, Watson, Satre
Nays: Medina.

AAP2013 0004 was approved 8-1.

BREAK 20:35 – 20:40

STV2013 0001:	Vacate approximately 346.6 square feet of Gastineau Avenue
Applicant:	Owen Clark
Location:	331 Gastineau Avenue

Staff Recommendation:
We recommend that the Planning Commission adopt the Director's analysis and findings and deny the requested Street Vacation permit.

If the Planning Commission elects to amend the findings and approve the requested vacation, the following conditions are recommended:

1. The owner is required to construct a retention structure to protect the building from debris falling from the roadway.
2. A plat will need to be recorded for the vacation to be completed.
3. The recorded plat will show the AELP utility easement.

Staff Report
Beth McKibben, Planner, presented an aerial photo of the location and explained the area where the applicant was requesting to vacate. This area is 49.51 x 7 feet for a total of 346.6 square feet. There is a foundation and an existing retaining wall in this area. According to all the records, this building was built in the 1960s. It was used as an eight-plex. The applicant did some major work, rebuilt the foundation in 2000 and then again in 2007. The building burned and was severely damaged. It's located in the mixed use zoning district. The lot is 5000 square feet and meets the minimum lot size and depth but does not meet the minimum lot width. If the vacation is approved, it will comply with the setback requirements because there are no setback requirements in the mixed use zoning district. If the vacation is approved, then a minor plat will have to be required to finalize the action.

She then stated that they received a lot of agency comments and summarized saying AEL&P noted that there are overhead utility lines and they don't have any record of easements, so they would need to be noted on the plat or by document. The Fire Department has stated that if it

Attachment B

doesn't narrow the roadway, that they don't have concern. CBJ Engineering has commented that it would be best if the building was reconstructed on private property and encroachments in the right-of-way were removed. They also noted that if the vacation is approved, the owner should be required to construct a retention structure to protect the building from debris falling from the roadway and by granting the right-of-way vacation without requiring debris catchment and proper lateral support to the roadway is unacceptable. CBJ Streets Department commented that the retaining wall needs to be rebuilt in the encroachment limits for reconstruction. The encroachment impedes snow removal and they have safety concerns with debris and snow falling as they plough the streets.

Ms McKibben then mentioned public comments [blue folder] with concerns about safety access and fire response and drainage.

The findings are that the application is complete and complies with public notice requirements, but the findings also note that the street vacation materially endangers the public health and safety in that Streets has noted that the retaining wall needs to be reconstructed and the location of the building inhibits that reconstruction.

The staff report notes that the proposed vacation does not appear to have decreased the value or be out of harmony with the neighboring area, but it is not in general conformity with the Land Use Plan. Staff is recommending that the Planning Commission adopt the Director's analysis and findings and deny the request of vacation. If the Planning Commission chooses to approve the vacation, staff is recommending the following conditions:

1) The owner be required to construct a retention structure to protect the building from debris and falling on the roadway.
2) She noted that the second condition was not in the staff report and in re-reading through Engineering's comments; she realized that granting the right-of-way without proper lateral support to the roadway was unacceptable [lateral support being the retention law]. She suggested that the second condition be included for now and that she would verify with Engineering the next day if that was their intent and if it was, it would be left in and if it was not, then they could take it out.
3) The plat will be recorded for the vacation to be completed and the recorded plat will show AEL&P utility easement.

Chair Satre asked why the public comment section [blue folder] did not have the names of those who commented. Ms. McKibben stated she did not know about a policy requiring signatures.

Mr. Miller asked why the structure was not legally non-conforming. Ms. McKibben stated the reason as being that the building crosses the property line and it is never legal to build in the right-of-way.

Mr. Miller spoke of a year 2000 building permit which was issued for foundation repair and asked why there was a building permit issued then and CBJ cannot issue one today to do some rebuilding. Ms. McKibben replied that it was her understanding that the maintenance required for the foundation in 2000 was approved because the building was existing. There was very interesting history for this property and the discussion on the encroachment. She talks about a memorandum from 1978 where the assistant attorney at that time had noted that they wouldn't

grant an encroachment permit, but when fire damaged the building, a decision was made to remove the encroachment and built on its own lot.

Mr. Watson commented that they cannot accept unsigned documents, though it was well written, and mentioned reading somewhere in the City guidelines that they do not accept unsigned documents. Chair Satre stated that perhaps when they get to the final decision on this, a comment could be made on whether or not certain things are part of that record.

Mr. Haight asked what the responsibilities were for building retaining walls and barriers to contain snowfall debris etc., if this building was reconstructed such that it met the setback requirements. Ms. McKibben answered that it was outside her area of expertise but that over the course of the years, there has been correspondence between various property owners, not the current property owner, but prior property owners in the City as to who was responsible for maintaining that retention wall, though she assumed they would have to go through the appropriate permitting process.

Mr. Chaney commented that right now, it is in the right-of-way, which meant that the responsibility was on the property owner to protect themselves from flying snow and debris. If they are on their own property, the situation changes quite a bit, and they would just be like any other project and would not have the special requirements to protect themselves from debris.

Ms. Lawfer asked what exactly they meant by the retaining wall and the lateral support, if they were to approve this.

Ms. McKibben presented a photograph and explained where the retaining wall would be and that the lateral support refers to the retaining wall, but stated she would want to verify that before leaving it in the condition.

Mr. Watson referred to a particular section in Title 49, regarding if a house is burned down/destroyed, but the foundation is still there, how that differs from other applications. He discusses an incident last fall regarding someone approving one and then shortly thereafter it burned down and this person was allowed to rebuild. Ms. McKibben states that a legally non-conforming building can be rebuilt if the extensive damage, excluding the foundation, is seventy-five percent. This building is not legally conforming because it crosses the property line and it is built in the right-of-way.

Mr. Medina asked Ms. McKibben to elaborate a little bit on the memorandum from Ron King, specifically where he talks about the Comprehensive Plan and the future extension and widening of Gastineau Avenue. Mr. Medina believed that Mr. King stated it was not in conformance with the Comprehensive Plan.

Ms. McKibben referred to Page 5 of the staff report, which discusses conformance with adopted plan. In this staff report, she noted that the Comprehensive Plan guidelines consideration for Subarea #16 states, 'Consider mechanisms to encourage and allow vehicles, less residential development in Gastineau', and stated that this was not the one that Mr. King was referring to. The plan further recommends guidelines, consideration of Subarea 15, 'An alternative roadway connecting Egan Drive to downtown to Thane Road'. The idea of that road was to extend Egan

Drive to Thane to create an alternative access and by vacating this, the road could not be widened, as noticed in the aerial photo, which was shown to be very narrow in front of the building and appears that it would not be able to accommodate a wider road that would be needed to extend the same road.

Chair Satre opened public testimony.

Public Testimony

Owen Clark, 1775 Diamond Drive, Juneau, pointed to the map for the location of 331 Gastineau Avenue. He stated that he formerly owned it with a partner, but has not had a partner since about 1991. When they took over the property, the previous owners had been back and forth with the City about the retaining wall for years. The City said it wasn't holding up the road. The property owner wanted to take the wall out at the time, but the City said he would have to bond it because they would lose their road; it was about that time that Mr. Clark came into it. Mr. Clark discussed that they had been working on the building and putting concrete under it [almost 100 yards of concrete on one side] as well as concreting wing walls. Mr. Clark explained that over the years they talked to the City and when the City was going to do the reconstruct on Gastineau Avenue, the City informed they would fix all the retaining walls. Phil Buck stated that there would at least be a minimum of a jersey barrier wall, which didn't happen. Mr. Clark stated that they ended up putting just a curb and gutter, which has failed. He expressed a desire to just rebuild it like an eight-plex. He went on to mention that when the construction of the road ensued, 40 feet high retaining walls were built and he was told to pay half. He states that he had asked if anyone else on the project had paid half and was told no. He would have rethought it then because Rorie Watt had informed him in a letter, which he misplaced, that paying half would have meant vacation of the land. Mr. Clark had asked if he could work as the contractor but was told it would go to Arete Construction. Mr. Clark paid Arete Construction himself to put in a 6-inch water line into that building because he had planned on a fire sprinkler, which he notes was a little late, but he did get a 6-inch pipe to go into the foundation. The eight-plex he stated currently has six one-bedrooms and two two-bedrooms which he would like to turn it into 6 two-bedrooms, he would have to pull the roof off and build the walls from the second floor.

Chair Satre opened up for questions to the applicant.

Mr. Haight asked if it was possible for Mr. Clark to rebuild with that uphill wall back behind the property line now and not use the existing foundation on that side or a new foundation. Mr. Clark stated that he probably asked for too much square footage on this vacate. He stated that in talking with Mr. Chaney, he was told he might as well go for the 7 feet because an overhang was being considered. Mr. Clark states that he could actually get by with 190 square feet. He asked for 340 and that was for approximately a 2-feet overhang up top. He states that it was suggested that he do that. Since the building had been there from the 60s, he thought that it would get some type of retainment, just to hold the road, because the road is failing again now. It was brand new back in 2001. Mr. Clark discusses the bidding of that job with Arete Construction, who committed $3,079,000. The engineer's estimate was $700,000, which left $628,000. He stated it was only a 50-feet stretch. The building has been there and paying taxes for about 53 years. He thought there was a possibility that the road would be fixed, but stated that it did not happen, though they put in a standard curb and gutter. Mr. Clark stated that he knew the guys who were doing the work and they said it was the only place in Juneau where they had ever poured curb

and gutter where they could not stand on the downhill side of it to do the job. Mr. Clark noted that it must have been quite steep.

Mr. Haight rephrased his question asking, 'Given the fact that with this proposal, a retaining wall would have to be built, which is a fairly decent expense, is it more reasonable to reformat your foundation or rebuild the upper part of the foundation, so that's behind the property line versus in the vacated portion and not go through the process having to build a retaining wall; is that not possible?' Mr. Clark replied that there was about 100 yards of concrete and two foot walls but it was a feasible option; however he would ask if the City would be willing to pay half if this does pass and he would do the work of putting in the retaining wall. Mr. Clark went on to say that it was not just the foundation he was trying to save, but also the exterior walls. It's all framed with 2x6s. He had an engineer down there who thought a lot of it could be kept standing. He stated the work was all permitted and inspected by the CBJ.

Ms. Bennett raised a concern regarding the narrowness of the road and asked how this project was going to be staged. Mr. Clark admitted that it was going to be tough. He referred to one that was built next door, which was a huge 22 unit project. He noted that they had more room to work. Mr. Clark stated that he would just have to buy the permit to keep people from parking there while the work was being done. The curb and gutter failing has prevented him from getting in there to start any demolition. He stated that by driving any kind of equipment up there, he would just bust off that curb and gutter. He has tried to meet the guys down there but has not been successful in that attempt. He also noted that the property next door was vacant and might be able to work with that landowner; Dr. Connor owns that.

Bill Leighty, 227 Gastineau, said that he had lived there for 28 years. He testified that he was well aware of the unfortunate state of the building and would like to have it removed, whether this particular application is denied or not. He wondered what kept it there for so long and if the application were to be denied, asked if there was a plan for removing it. He stated that he appreciates the history that Mr. Clark has given regarding the way the retaining has happened, but states there is nothing that could be done about it.

Mr. Leighty stated it would be good to have more housing units in town and so a successful new structure there providing housing units would be an advantage to all. For those who live on Gastineau, it would mean more eyes on the street. He assumed it would be quality construction and quality people who would live there. He imagined that many of them will have vehicles and therefore would require some sort of parking space on the street. He did not know if conditioning of the building could be done, so that the residents are required to not own cars. Because the street is narrow, it may be necessary to have a no parking zone on the street right across from the building, as can be seen from the photos. He wondered if that was a condition that could be imposed.

Mr. Leighty discussed the idea on page five and six in the staff report of an alternate roadway to Thane and stated his long-time awareness of the same. He stated that back when Arete rebuilt the street, they made that route available to themselves all the way to Thane Road in order to bring material in to build the street. Therefore, it is known that it can be done, but he thinks it would be undesirable to try to make that very narrow corridor a two-way or even a one-way access alternative except under emergency conditions.

It seemed to Mr. Leighty that it was essentially an engineering problem requiring cooperation between the City and Mr. Clark. The roadway needs a retaining wall; anyone who observes that, looks at the pictures, stands there, can see that the retaining wall has failed, that the roadway is to be stabilized, but it is a pretty significant structure that's going to cost a lot of money. He had no idea if the 100 yards of concrete that Mr. Clark had put in had any effect on stabilizing the road bed and making it usable. That is going to require some of the footprint of the area that Mr. Clark would like to have vacated from the street. Therefore, maybe the project of building an eight-plex or even a six-plex there is just too ambitious. As part of the cooperation, cost sharing and utilizing whatever footprint of the building can be done there, engineering could come up with a simple solution that may or not be affordable to Mr. Clark, something that would allow for a stable structure and the remainder of the land to be used. He did not know what kind of access one would expect from the street to the dwelling units there; but, for sidewalk purposes, there assumed there was probably room for a sidewalk on the downhill side of the street, albeit very close to Mr. Clark's building.

Mr. Leighty opined that before the applicant and CBJ proceed, it might be in the best interests of both to assure themselves that even if that vacation and retaining wall problem were solved, that the foundation under the building is going to be adequate. He imagined that Mr. Clark has had an engineer's opinion on the foundation.

In Mr. Leighty's experience, he does not remember a piece of fire equipment that has had to back down Gastineau; although it is referred to in the application that the fire trucks cannot turn around up there, somehow they do. It can be seen in the picture or by driving up there that just past Mr. Clark's building, there is a fairly large turnaround where the fire trucks could turn.
He suggested that rather than a vacation, since some sort of cooperative effort is going to be necessary between the City and Mr. Clark, that this would be an easement granted to use the reinforced part of the roadway. He also stated a significant concrete structure would be needed. He further suggested a joint investment in that retaining wall could possibly be required. He voiced the need to get an engineering estimate to see if the project was still feasible. He concluded by saying that they would like to see the building removed and ideally replaced by a nice new one.

Mr. Bishop asked Mr. Leighty to describe why he preferred an easement over a vacation and asked what the difference between them was. Mr. Leighty answered that a vacation is an abandonment of a piece of the right-of-way by the City. If there is a joint investment by Mr. Clark and the City in a retaining wall structure there, then he should have the right to cross that to access his building and that would be an easement rather than a vacation.

Mr. Bishop interpreted Mr. Leighty's explanation as not maintaining the existing structure with that easement, but rather a new structure with easement through for access. Mr. Leighty commented that a new structure needs to be built there, a major retaining wall.

Mr. Bishop further questioned maintenance of the old foundation and the footprints of the old structure. Mr. Leighty stated that he did not mean that would affect his existing foundation. It was in the requested vacation area that the new structure would need to be built. He assumed that a retaining wall with abutment walls, a roughly U-shaped configuration, would be needed

there and that in order to use the foundation in his building, Mr. Clark needs to have an easement across or through that new retaining structure to use the site.

Mr. Bishop wanted to clarify if that meant for the easement be to the new structure with the same footprint as the old structure. Mr. Leighty said that was correct and imagined that was what Mr. Clark had in mind as well; that he is going to use the existing foundation of the building, he just needs to get access to his building.

Mr. Bishop stated that maybe he is just misunderstanding it, but it seemed to him that the foundation is in the right-of-way and they were vacating the right-of-way to maintain the existing property.

Mr. Leighty gave an example of supposing the new retaining structure interfaces with the part of his foundation that is in the right-of-way and he has an easement to use the resulting retaining structure, which includes a small piece of his foundation footing and asked if that was a valid concept. Mr. Bishop was still confused about how that was preferential to a vacation because they both seem to serve the same purpose of being able to maintain the existing structure.

Mr. Leighty was not sure but stated that Mr. Clark needs access to his building and the City and Mr. Clark need to share the cost of building the retaining structure that allows him to use that site.

Mr. Chaney clarified that the slight advantage of having the right-of-way remain where it is, with an encroachment permit rather than an easement, would be kind of kicking the can down the road close to 100 years when the building came to the end of its useful life, the Commission at that time could look at widening the right-of-way back to its original platted width.

Mr. Watson referred to Mr. Clark's statement about getting by with 190 square feet and asked if that would move him further back off the road a lot and if the road repair would be done by the City or by him.

Mr. Chaney clarified, 'Maybe I'm somewhat responsible for the square footage being requested because I had recommended that if he was going to ask for a vacation to include wherever the building encroached into the right-of-way, but if we move back and not include the eaves, we are reducing the numerical square footage, but it won't be reduced where the building is or move him back in any way, it's just exactly where his foundation wall is, so that's the difference in the area that we are talking about.'

Mr. Watson wanted to know if repair of that road would become the responsibility of the City if he were to move further back. Ms. McKibben noted that the application was for the area around the building as well (rectangle) but Mr. Clark, referring to the 190 feet, included only the building. Chair Satre stated it does not ultimately change the footprint of the building. Ms. McKibben replied that it does not really change the distance from the road.

Ms. Lawfer asked if the curb and gutter were put in by the City. Mr. Clark replied that was right.

Public testimony was closed.

Ms. McKibben mentioned that she could share the name of the person who had given the comments though the person had asked not to be named. Chair Satre preferred comments submitted with names but they could make a decision to include or not include these comments as part of the overall record at the end.

Ms. Bennett stated that there is a foundation that the applicant wants to build on and a failed street that is not his responsibility, but in looking at the photos, there seems to be a real problem between the street and his building in terms of what's actually going to happen and some agencies have said that there needs to be a retaining wall sufficiently high, so that snow removal isn't a problem and debris does not set. She questioned whose responsibility that would be and how they would proceed. Mr. Clark had suggested that the City would pay half but they did not have any promise from City Engineering that they are going to come up with half of the price.

Ms. McKibben replied that the comments from Engineering are that the owner be required to construct the retention structure.

Ms. Lawfer asked about the plans regarding widening the road because it would look more logical to widen it on the uphill side and not the downhill side. Ms. McKibben replied that there weren't any immediate plans to widen the road as far as she knew. She did not know exactly where the right-of-way was or how wide it was. The plats there are very old and very difficult to read. There may not be any right-of-way on the uphill side; if they were going to do that, they may need to purchase it.

Mr. Bishop felt uncomfortable making a decision without getting all the information and professional opinions from the Engineering Department and Public Works and suggested continuing the item until such time they could have more interplay between the agencies, the Planning Commission and staff.

While this wasn't a legally non-conforming issue, Mr. Miller asked hypothetically, if it was on his own property, and it was a legally non-conforming use, and they had a fire, and if the fire damage was more than 75% not counting the foundation, then when it gets rebuilt, it has to be conforming. Ms. McKibben replied that was correct.

Chair Satre thought Mr. Bishop's comments to be appropriate in that there were still questions to be answered like the stabilization of the road, what that would mean to the property owner and what it would do for the existing foundation and agreed that a decision might not be possible without getting all the facts in line.

Mr. Miller agreed as well to continue the item. He was leaning towards denying it anyways but felt that it would be tragic if denying this made the project unfeasible in terms of setting the building back 7 feet with no overhangs and the road doesn't get fixed etc., because Mr. Clark was still paying taxes on a property that was not generating any income. He wondered if there was a way to work it out where it could be a win-win for everybody.

Mr. Chaney requested that they provide staff with a list of questions they would like answered, if the decision was to continue the item. He also informed them that this lot is in the fee in lieu

District for parking, so they have the option of paying a fee and not having to provide parking on site.

Mr. Watson agreed with Mr. Bishop's opinion to continue the item and found it discouraging that this situation has been in existence for 50 plus years and now all of a sudden the City wants to tear it. He recalled a recent issue of the above-ground drain coming down somebody's property and how the Commission is constantly bumping into such cases all the time. He had hoped that Engineering would have been present to answer some of the questions as well. He was concerned that in this case they were dealing with actually removing housing from the community rather than replacing or putting housing back in.

MOTION: *by Mr. Miller to continue the item.*

Chair Satre asked Mr. Miller to provide some questions for staff to follow up on.

Mr. Miller said they need to find out from the agency concerned if they would consider the vacation if a retaining structure was built, and then if the retaining structure was built by Mr. Clark, if it could be tied in with the existing 100 yards of concrete that has been placed at the uphill foundation of the building; also how the design would be handled and CBJ's share of responsibility in fixing the problem. He also alluded to Mr. Clark's statement about pulling the roof off and building up the walls and asked staff is there was an alternative for that.

Ms. Lawfer stated that she would like to see the plans for widening that road and whether they are planning on doing it on the downhill or uphill side.

Mr. Watson referring to Ms. Lawfer's comment regarding widening asked if staff could provide a timeline for that as well. He also queried how quickly the City would fix that street if the applicant withdraws from the right-of-way. He went on to ask what is keeping the City from repairing that street now since it is in dire need of repair.

Mr. Medina questioned if there was any right-of-way on the uphill side.

Mr. Miller, "If Mr. Clark did choose to rebuild back onto his own property, would the CBJ accept not having to remove the existing concrete foundation that is in place?'

Chair Satre stated that the item had been continued until they got some answers and hoped to be able to find a solution.

X. BOARD OF ADJUSTMENT

XI. OTHER BUSINESS

Chair Satre spoke about the Comprehensive Plan and how it had started off as a simple update and now is becoming almost a complete rewrite. He stated that this will ultimately go to the Assembly who might require more changes or they might decide to keep the 2008 Comprehensive Plan. He opined that they were given a charge and they have to complete it the best way they can; there may be things that the Commissioners or the public are not happy about,

Planning Commission:

The property located at 331 Gastineau Avenue is in a neighborhood identified as Historic Preservation in Juneau. It was built prior to building codes. The property was burnt in a fire and as the owner I have been trying to rebuild ever since. The building should be "grandfathered" in as is because the structures footprint will not change and it does not require a "vacate" as the building exits now.

I am submitting an Engineers report showing the building is rebuild able. I have been denied a building permit for years yet numerous other properties owners have been granted various permits.

1) Received 3800 square feet of right of way to build a <u>new</u> structure
2) Obtained vehicular and utility access across a City lot
3) 6 plex did not meet current zoning setback requirements however it was "grandfathered" in therefore it could be reconstructed on the current footprint.
4) Another was granted a variance to reduce the front yard setback from the required 5 feet to zero feet to allow construction of an open porch

There have been questions regarding the retaining wall on this property. I have attached the Capital Improvement Project scope. All retaining walls were to be repaired or rebuilt in this project. The retaining wall was not repaired or rebuilt yet

Attachment C

funding was available and the city neglected to repair it. Prior to the Capital Improvement Project the building was granted permits and building inspections passed, the building was receiving extensive improvements such as a concrete foundation, a six inch water main, new beams and all new electrical. All approved and signed off on prior and after the Capital City Improvement project. Therefore, the city must consider this safe as they would have repaired it if not and they would not have continued to issue permits for work after the Capital Improvement Project was complete. It was brought to the city's attention when it was not being worked on as funded and promised yet it was still neglected.

There have been 2 major apartment building fires and the city continually contacted me for 2-3 years on a monthly basis to rebuild yet other divisions in the city were denying me a permit.

Housing First was interested in purchasing the property, but needed a grant to purchase. It took them 1 ½ years to determine they would not be able to get the funding.

Based on the Engineers report and the fact that the property should be "grandfathered" in and existed therefore a "vacate" not necessary and the Capital City Improvement project neglected the retaining wall. The Capital City Improvement contractors bid came in approximately $700,000.00 under the Engineer's estimate yet they didn't repair or rebuild 40 feet of retaining wall. At one time we had documentation that showed

funding was actually pulled off the project when it got to this property.

I ask that the city allow me to obtain a building permit.

Qualitative Engineering Analysis

for

Repair of Existing Building

Located

331 Gastineau Avenue

BACKGROUND

A fire damaged the existing building in 2007 and the owner wishes to restore the building to its original condition. Previous plans to reconfigure and upgrade the building have been abandoned due to upgrade requirements pertaining to code required upgrades in previous decisions with A/E firms in Juneau and the City and Borough Building Department. The current plan is to restore the building to the original configuration that existed prior to the fire.

The owners, Kami and Owen Clark asked Moore Engineering to assess the structural condition of the building and prepare this report to help them decide on the best course of action to be taken. Specifically they asked me to opine on the following issues;

1. Existing Conditions of building and site
2. Structural Condition and Repairs
3. Building Permit Requirements
4. Building Encroachment issues
5. Requirements of a Debris Slide Protection System

The following reference materials was reviewed or used as part of this review of the building

- International Building Code 2006
- International Existing Building Code 2006
- ASCE Structural evaluation of Existing Buildings
- ASCE chapter 7 Structural
- Consultation with Architectural Services
- Foundation Repair Plan by BRD and Associates

EXISTING BUILDING CONDITION

The building is a four-story building of wood frame construction. It is locally known as the Pacific Coast Apartment building and enjoyed eight rental units. Three 1-bedroom units are located on floors two and three and there are two 2-bedroom units located on floors one and four. There is a laundry/mechanical room located on floor one as well.

All units were accessed from stairways from Gastineau Avenue. No parking was provided with the building which was common for buildings built in the mid 1900's in Juneau. Records indicate the building was constructed in 1959.

Last month I examined the building and took a survey cross section along the main fire area which was the exterior stairway and porches constructed on the west side of the building. Figure 1 shows the results of this survey and relationship of the building to the property lines based on an as-built completed on the property by John Bean dated, 2010.

The stairway and building access via the original stairway and access have been removed as the fire damaged these portion of the building severely and rendered them non-functional and not worth salvaging. The following photos show this area of the building.

A new apartment building (special needs housing center) was constructed on the property to the south of the subject building. The elevated parking structure for this building is directly adjacent to the subject building. See following photo.

STRUCTURAL INSPECTION

The fire was mostly limited to the exterior features of the building. Since the main fire area was in the stairway and porch areas of the building, this extended to the exterior siding mostly on the west side of the building. The photos below show the building and fire damage present around the building.

The porch and stairway have been completely removed and require replacement. Replace of these features will require meeting the new code requirements as they have been completely removed and are no longer just considered an alteration of an existing feature of the building. One issue with the stairway and porches is that they have encroached on adjacent property owners, so there are additional issues (see comments under property below).

The porches and stairway corridors were supported by cantilevering the floor joist of the first and second floors. Posts and beams supported the outside edge of the porches and stairway. The fire damaged the blocking in the floor cavity and the end of some of the floor joist along the

perimeter on the west side of the building. The damaged joists will need to be cut back at each floor and blocking replaced. It is recommended that the entire run of extended joists be cut back and that a new rim joist system be installed the entire exterior of the west wall. Additional repair of the wall plates in this area may be required when completely uncovered and additional inspection completed.

All of the siding will require removal on the west wall and about 20 percent of the wall sheathing. Only limited areas of siding removal is required on the north and south walls and none on the east wall. In all areas where the siding is removed the existing sheathing should be re-nailed using standard 4 inch spacing on the edges and 12 inches in the field. Replacement sheathing will also require this nailing pattern.

The new concrete foundation work completed from 1996 to 2002 was not damaged and all concrete appears to be in good condition. This is the same for the new wood support beams installed in the underfloor/crawlspace areas to support the building. They appear undamaged. Rain water is contacting one of the beams and work to repair the roof leak should be made to limit any future damage from environmental issues.

Removal of the sheetrock and paneling surfaces of the interior portions of the building resulted in finding some previously unknown fire damage areas. Work in one unit (unit 2) in this corner of the building was completed on the floor framing and the old charred wood was not removed. Removal of the charred portions and painting with Kilz or similar stain-blocking primer is recommend before any new finishes are installed.

Adequate size headers appear to be missing on a few of the doorways/opening in the interior bearing wall systems. All should be checked with the reconstruction of the building. Some headers on the exterior wall have some charring from the fire and need replacing.

The wall studs appear to be undamaged except for some charring on the fire side of the building. Framing on the lower walls and around window opening will require some replacement. After the siding and sheathing is exposed: additional inspection is warranted.

The roof covering is deteriorated and considered beyond its useful life. There is a noticeable sag in the roof mostly due to the lack of a proper load path from interior bearing systems to the foundation resulting from the original construction. When the new support beams were added to the lower floor to support the building no attempt was made to level the beams or relevel the interior support structures. It is recommended that releveling and shimming the new foundation support beams be accomplished with your reconstruction project.

SPECIFIC BUILDING CODE REQUIREMENTS

While not intended to be complete, I am attempting to give you a starting point at which to plan for the building reconstruction. You will need to bring a licensed Architect on board to clearly understand all of the code and upgrade concerns. In reading the code it is unclear which parts apply in certain cases. The CBJ Building Official is the city's arbiter of how the various codes

My structural analysis load capacity of the existing building is as follows:

Member /System	Existing Capacity	Code Required Capacity
Roof Joist- Snow Load	35 psf	50 psf
Floor Joist– Live Load		
1st	40+ psf	40 psf
2nd	40+ psf	40 psf
3rd	35 psf	40 psf
4th	35 psf	40 psf
Stairways/decks exit corridors	50 psf (estimated)	100 psf
Lateral Load	Seismic - none Wind – 90mph	Seismic 75 % Site Class D Wind 120 mph
Foundation	1500 psf	1500 psf
Special roof loads Snow drift/Rain	Non-compliant	As Required

Load combination vertical and lateral load compliance for the existing building is considered non-compliant. Repairs to add holddowns and complete renailing of the sheathing around the building would upgrade this condition to compliant. The code does recognize exceptions for compliance with load combination for lower design category buildings such as this one. Also, from my review it appears that you may need to double up on the lower wall studs to account for load combination if they apply in full.

Furthermore, it is my opinion that the structural damage from the fire to the main envelope of the building is considered less than significant. With this opinion the code implies for most structural elements that less than substantial structural damage, the damaged elements shall be permitted to be restored to their predamage condition.

It would be my recommendation that since the roof covering is planned on being completely replaced and that will involve some removal and replacement of sections of the roof sheathing that you consider upgrading the entire roof system to meet code for structural, energy and ventilation requirements for new construction.

ELECTRICAL

Section 607 states that the existing electrical wiring and equipment may be repaired or replaced with like material. The existing use of romex wire and grounding outlets shall be allowed for the repair of the electrical system.

Use of GFIC circuits at kitchens and bathrooms where required should be upgraded. Also, all building smoke detectors should be wired together with a GFIC circuit and have battery backup. Carbon dioxide monitors also should be installed as required by current code.

MECHANICAL

Section 608 states that the mechanical systems shall not make the building less conforming than it was before the repair was undertaken. It is recommended that improvements to all kitchen stove and bathrooms be made with exhaust fans that vent directly to the outside.

PLUMBING

Plumbing materials and supplies for repairs shall be only devices approved in the International Plumbing Code. Water closets shall be upgraded to be the low flow flushing type.

ENERGY CODE

The existing building is exempted from meeting the new energy code requirements. However, when replacing glass (windows) you will be required to meet the current code requirements for that system in the building.

FIRE CODE

The code was changed by the CBJ on certain buildings in that 16 bedrooms with fire separation walls and floors are exempted from the ICC sprinkler requirements for R2 buildings. However, the CBJ also added a sprinkler requirement for buildings greater than 3 stories. In this case with the repairs work planned, it appears that the CBJ will require sprinkler upgrades to the building.

You have installed the 6 inch service to the building for adding the sprinkler system, which is good. The open porches may be exempted from sprinkler requirements with consultation with the Building Official. Further analysis of this area is needed.

All glass in bedroom should be planned to be upgraded to exit type approved windows.

ACCESSIBILITY

This part of the code is somewhat confusing but under the repair of existing building portions, you are not required to provide accessibility to the building. It is almost considered somewhat technical infeasible. Parking is by public street, and access is via a non-accessible stairway to the building.

BUILDING ENCROACHMENT ISSUES

As shown on the attached survey map by John Bean, the building is slightly over the property line on the north side (about 4 feet) and the original entry stairway/access is over on the west side (about 2 feet).

The north side encroachment is public right of way and there are no provisions where you could gain title to this property without the vacation of the public right of way by the CBJ. I reviewed a letter dated, 2004, whereby the CBJ was planning to agree to vacate the right of way and resolve the issue with the existing retaining wall on the north side if you would pay for 50 percent of the work on a newly proposed retaining wall system (approximately $40,000).

Because all of the other retaining walls on the then on-going Gastineau Street project were being paid at full face value by the CBJ, you felt this was a hardship and rejected the offer. In reading the correspondence, I believe the CBJ feels that they have no interest in the wall; it was built strictly for your building and therefore has no obligation to replace it at public expense. Many of the walls on Gastineau Avenue are located where existing walls or an old elevated street was located. Without good records it would be unclear who owns the wall where many of the other structures may have been for roadway purposes.

In parts of Juneau, it is fairly common for buildings to encroach onto the public right of way. I would recommend negotiating an easement with the CBJ. If this is not possible, you may want to retain a qualified attorney to assist you in ensuring your right to reconstruct your property. I am sure you can find many cases where existing homes in the public right of way have been remodeled or restored to the existing conditions for one reason or another. The main issue is you just will never get a clear title to the property.

This was not an unknown condition as the approval of the 1996 building permit recognized this fact. The building was clearly shown on the foundation repair plan as being within the public right of way and work to restore and improve the foundation on the north side of the building ***was approved and completed on public right of way under this permit***. I have not reviewed any evidence that has changed from 1996 to the current time that would not allow this practice to

continue. Furthermore the building is hardly damaged on the north side (public right of way side) and the foundation has been restored and is in good condition.

As for the encroachment on the west side on private property, the same issue is present, you most likely will never obtain clear title to the property but the owner may not object to restoring the entry porches and access stairway back to preexisting conditions prior to the fire. In your comments that you had verbal permission from the previous owner to enjoy that feature is not much value in getting title to the property. Obtaining title by adverse possession does not appear to be possible as your title has no color of title to the adjacent property. You should seek legal advice on this issue form a clear consensus.

DEBRIS SLIDE PROTECTION

As the authority having jurisdiction on the building, the CBJ can make policy on how new construction is being completed. New construction in the area from downtown to your building is in the debris slide zone and new construction in your area has special requirements for debris slide protection. However, in my opinion, requiring an existing property to construct a debris slide to protect against landslides is considered a hardship and does not appear to be uniformly applied. There are many existing buildings with extensive upgrade projects within the debris slide zone that have not had this requirement applied. It would also appear that this would be considered a near taking of the property due to the economic cost of this debris slide wall which I have estimated at $150,000. Because your building falls within the existing building provisions of the code, I could find no reference to such a requirement in the building codes sited. I would advise you seek an attorney to represent you on this matter if you cannot work out some other arrangements or relief on this issue from the CBJ.

Attachments

Figure 1 sketch of the building

Property As-Built Survey

Attachment A 1996 and 2002 foundation plans/permits

Attachment B Letter from CBJ on Retaining wall deal

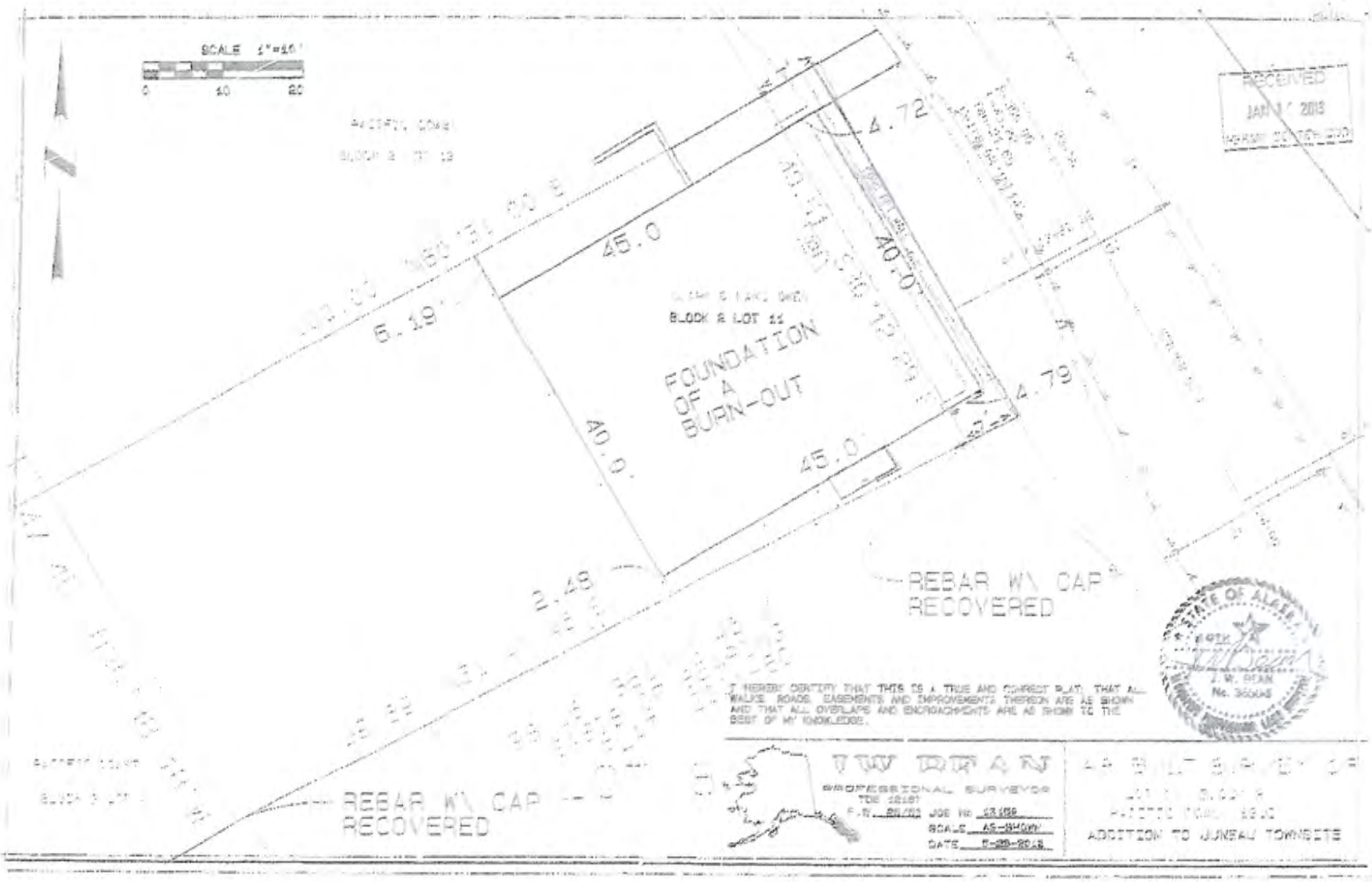
SCALE 1"=10'
0
10
20
RECEIVED
JAN 1 7 2013
4.72
45.0
6.19'
BLOCK & LOT 11
FOUNDATION
OF A
BURN-OUT
40.0
40.0
45.0
4.79'
2.49
REBAR W\ CAP
RECOVERED
REBAR W\ CAP
RECOVERED
I HEREBY CERTIFY THAT THIS IS A TRUE AND CORRECT PLAT; THAT ALL WALKS, ROADS, EASEMENTS AND IMPROVEMENTS THEREON ARE AS SHOWN AND THAT ALL OVERLAPS AND ENCROACHMENTS ARE AS SHOWN TO THE BEST OF MY KNOWLEDGE.
STATE OF ALASKA
J. W. BRAM
No. 36008
PROFESSIONAL SURVEYOR
SCALE AS SHOWN
DATE 5-29-2012
ADDITION TO JUNEAU TOWNSITE

ATTACHMENT A

DEVELOPMENT PERMIT APPLICATION

(APPLICANT - PLEASE FILL IN THE PROJECT/APPLICANT INFORMATION)

CITY and BOROUGH of JUNEAU

Project Number

Date Received: 3-13-02

Project Name (City Staff to assign name): Pacific Coast Apt FND

Project Description: REPAIR AND IMPROVE FOUNDATION & STAIRCASE

PROJECT / APPLICANT INFORMATION

PROPERTY LOCATION

Street Address: 331 GASTINEAU AVE. JUNEAU, AK.

City / Zip: 99801

Subdivision (if known): Pacific Coast Addition

Survey (if known):

Block / Tract (if known): 2

Lot (if known): 11

Assessor's Parcel Number (if known): 1C070102011O

LANDOWNER / LESSEE

Property Owner's Name: OWEN CLARK ☐ Contact by E-Mail:

Contact Person: OWEN

Work Phone No.: 586-1754

Mailing Address: 1775 Dimond Drive JUNEAU AK.

Home Phone No.: SAME

FAX No.: SAME

LANDOWNER/LESSEE CONSENT

(Required for Planning permits not needed on Building/Engineer permits)

I am (we are) the owner(s) or Lessee of the property subject to this application and I (we) consent as follows:

A. This application for a land use or activity review for development on my (our) property is made with my complete understanding and permission.

B. I (we) grant permission for officials and employees of the City and Borough of Juneau to inspect my property as needed for purposes of this application.

X _____ Landowner/Lessee Signature _____ Date

X _____ Landowner/Lessee Signature _____ Date

NOTICE: The City and Borough of Juneau staff may need access to the subject property during regular business hours and will attempt to contact the landowner in addition to the formal consent given above. Further, members of the Planning Commission and/or the Design Review Board may visit the property and may do so during the weekend before the scheduled public hearing date.

INITIAL ALL THAT MAY APPLY

APPLICATION TYPE	OWNER'S INITIALS
ALLOWABLE USE	
CONDITIONAL USE	
VARIANCE	
DESIGN REVIEW	
SUBDIVISION	
OTHER _____	

APPLICANT

(If same as OWNER, write "SAME" and sign and date at X below)

Applicant's Name: OWEN CLARK ☐ Contact by E-Mail:

Contact Person: OWEN

Work Phone No.: 586-1754

Mailing Address: 1775 Dimond Drive, JUNEAU AK

Home Phone No.: SAME

FAX No.: SAME

X Owen K. Clark — Applicant's Signature

X 3-13-02 — Date of Application

STAFF APPROVALS

(OFFICE USE ONLY BELOW THIS LINE)

OK	PERMIT TYPE	SIGN	DATE RECEIVED	APPLICATION NO.	OK	PERMIT TYPE	DATE RECEIVED	APPLICATION NO.
	ALLOWABLE USE APPROVAL					WATER PERMIT		
	CONDITIONAL USE APPROVAL					SEWER PERMIT		
	VARIANCE					GRADING PERMIT		
	DESIGN REVIEW APPROVAL — MINOR / MAJOR					DRIVEWAY PERMIT		
	SUBDIVISION — MINOR / MAJOR / PUD					RIGHT-OF-WAY PERMIT		
	STREET VACATION					PUB. FAC. TRANSMISS. & EXCAV. PERMIT		
	SIGN APPROVAL — (DATED IN HISTORIC DISTRICT? ☐ YES ☐ NO)					OTHER - (Describe)		
X	BUILDING PERMIT		3-13-02	BLD02-00091		Permit Intake Initials _____		

Zone _____ Total Lot Area _____ Required Setbacks: Front ____ Back ____ Side ____ Other ____

COMMENTS:

NOTE: DEVELOPMENT PERMIT APPLICATION FORM MUST ACCOMPANY ALL OTHER COMMUNITY DEVELOPMENT DEPARTMENT APPLICATIONS

BUILDING PERMIT APPLICATION

(Including Water, Sewer, Driveway, Grading, Mechanical, Plumbing, Electrical, and Building Safety Inspections)

(APPLICANT PLEASE FILL IN TOP PORTION OF PAGE AFTER FIRST LINE)

Project No:	Project Name: (City Staff to assign name) Pacific Coast Apt FND.	Case No: BUD02-00091	Date Received: 3-13-02

APPLICANT AREA

CONTRACTOR/OWNER-BUILDER: Owen Clark	☐ Contact by E-Mail	Contact Person	Phone No.
Mailing Address: 1975 Diamond Drive		FAX No.	License Number
ARCHITECT/ENGINEER: BRD Consulting	☑ Contact by E-Mail	Contact Person	Phone No.
Mailing Address: N/A		FAX No.	License Number

PERMIT CLASS: ☐ NEW ☐ ADDITION ☑ REPAIR/REMOD ☐ ELECTRICAL ☐ PLUMBING ☐ MECHANICAL ☐ WOODSTOVE ☐ WATER ☐ SEWER ☐ DEMOLITION ☐ GRADING ☐ DRIVEWAY ☐ BUILDING SAFETY ☐ OTHER

BUILDING TYPE: ☐ Residential ☑ Commercial ☐ Other

EXISTING DWELLING UNITS ON PROPERTY: 8 NEW DWELLING UNITS THIS PROJECT: 0 TOTAL EXISTING BUILDINGS ON PROPERTY: 8

DESCRIPTION OF WORK: Repair Concrete Retaining Walls Under Existing Building And Stairway

VALUE: TYPE (ie: house, garage, deck, unfinished)
New: Sq. Ft.
New: Sq. Ft.
New: Sq. Ft.
New: Sq. Ft.
Cost of Remodeling: $ 8000 (if any)

I hereby certify that I have read and examined this application and know the same to be true and correct. All provisions of laws and ordinances governing this type of work will be complied with whether specified herein or not. The granting of a permit does not presume to give authority to violate or cancel the provisions of any other federal, state or local law regulating construction or the performance of construction.

Signature of Owner, Contractor or Authorized Agent: x Owen Clark

Date: x 3-13-02

(OFFICE USE ONLY BELOW THIS LINE)

STAFF AREA

BUILDINGS — Occupancy Class: ____ Type of Construction: ____ FCC Code: ____ Permit Classification: Bu

Occupancy	Square Feet	@ Rate	= Valuation
		est	8000-

Bedrooms ____ Stories ____

BUILDING PERMIT FEES

PLAN REVIEW FEES
☒ Building Plan Review $ 84.94
__ Grading Plan Review $
Total Review Fees $

PLAN REVIEW PAYMENT
__ Date ____ Receipt No. ____ CK ____

LAND USE
PARKING
FLOOD ELEV
FIRM ZONE
FIRM MAP

LAND USE PERMITS:
Case Number
Case Number
Case Number
Case Number

ENGINEERING/PUBLIC WORKS
CITY WATER Units:
Case No:
Service - Size
Fire Line - Size
Metered
Extended Pay #
CITY SEWER Units:
Case No:
BOND Case No:
OTHER Case No:
ADEC On-site Water No ____ Date ____
ADEC On-site Sewer No ____ Date ____

PLAN REVIEW APPROVALS

	Initials	Date
__ Fire		
__ Zoning	N/A	
__ Engineering		
__ Water		
__ Sewer		
__ Architectural		
☒ Structural		3-13-02
__ Plumbing		
__ Mechanical		
__ Electrical		
__ Access		
__ Special Inspection Form		

APPROVED FOR ISSUANCE
Signature
Date 3-13-02

PERMIT ISSUANCE FEES
__ Adjusted Plan Review Fee $
__ Fast Track Fee $
__ Early Start Fee $
☒ Building Permit Fee $ 130.68
__ Water Assessment Fee $
__ Water Inspection Fee $
__ Sewer Assessment Fee $
__ Sewer Inspection Fee $
__ Grading Permit Fee $
__ Driveway Permit Fee $
__ Bond for ____ $
__ Other ____ $
Total Issuance Fees $

PERMIT ISSUANCE PAYMENTS
☒ Date 3-13-02 Rcpt ____ Ck 10421 $ 215.62
__ Date ____ Rcpt ____ Ck ____ $
__ Date ____ Rcpt ____ Ck ____ $
__ Date ____ Rcpt ____ Ck ____ $

Water Connection Permits
hereby acknowledges receipt of a ____ inch meter yoke.
x ____ Date: ____

CONDITIONS AND HOLDS ON PERMIT:

NOTE: MUST BE ACCOMPANIED BY DEVELOPMENT PERMIT APPLICATION FORM

City & Borough of Juneau
Alaska's Capital City

BUILDING PERMIT

Permit No.
BLD2002-00091
Proj #: BLD2002-00091

*NOTE: "Building Permit" is a generic term which includes Building Safety Inspection, Grading Permits, and permits for Electrical, Plumbing and Mechanical work!

Your special attention is called to the following:

This permit is granted on the express conditions that the construction shall, in all respects, conform to the ordinances of the City and Borough of Juneau. It may be revoked at any time upon violation of any of said ordinances.

The granting of this permit does not authorize the violation of any federal, state or local law regulating construction for the violation of the terms of any deed or covenant or any zoning or other regulation.

If plan review was required, this permit must be attached to the approved drawings. The permit, plans and record of inspections must be available on site at all times while the construction is in progress and before final inspection.

The yellow posting notice must be prominently displayed to show a permit has been issued and to assist the inspectors in location of the project. This permit becomes null and void if work or construction authorized is not commenced within one year or if work or construction is suspended or abandoned for a period of one year at any time after work has commenced.

Inspections can be arranged by telephoning 586-1703 or by written or faxed notification.
The Online Building Inspection Request Form is at: www.juneau.ak.us/cdd/insp_req.htm.
Work shall not proceed until the inspector has approved the various stages of construction.

Call before 7:30 AM for same day inspections.

Please provide the following information: Permit No, Address, Type of Inspection, Date and Time and Contact Name and Phone Number.

Job Address: 00331 GASTINEAU AVE
Issued Date: 3/13/2002
Permit Number: BLD2002-00091 PACIFIC COAST APT FND
Parcel No: 1C070H020110
Project Description: Repair concrete retaining walls under existing building and stairway.

Parcel Identification: PACIFIC COAST ADDITION BL 2 LT 11

Setbacks: Zone:
Front: Side 1:
Rear: Side 2:
Comments:

Owner: OWEN K CLARK
Address:
City: JUNEAU, AK 99801

Applicant: OWEN K CLARK
Address: 1775 DIMOND DR
City: JUNEAU, AK 99801

Fee Type	Date	Receipt	Amount Paid
1 Permit Fee	3/13/2002	13209	130.68
1 Commercial Plan Revie	3/13/2002	13209	84.94
		Total Fees Paid:	215.62

Valuation for Permit Fee Calculations:

BUILDING PERMIT	8,000.00
Total Valuation:	8,000.00

Project Conditions and Holds:
None.

Inspections Required: Call for inspection before covering or concealing any of the work described below. Inspections may be combined.
110 Insp - Excavation/Footing 120 Insp - Forms and Rebar 800 Insp - Commercial Final

RECEIVED

JUN 17 2010

MRV ARCHITECTS

BAXANDALL ASSOCIATES
CONSULTING ENGINEERS

P.O. Box 32478
Juneau, Alaska 99803
(907) 364-3213

****

The enclosed sheets are the structural analysis and calculations for:

PROJECT: FOUNDATION REHAB.

DESIGNER: RYAN JOHNSTON

OWNER: OWEN CLARK

LOCATION: GASTINEAU AVE.

SHEETS 1 **thru** 3

OK
12-3-10

Ryan Johnston
Project Engineer

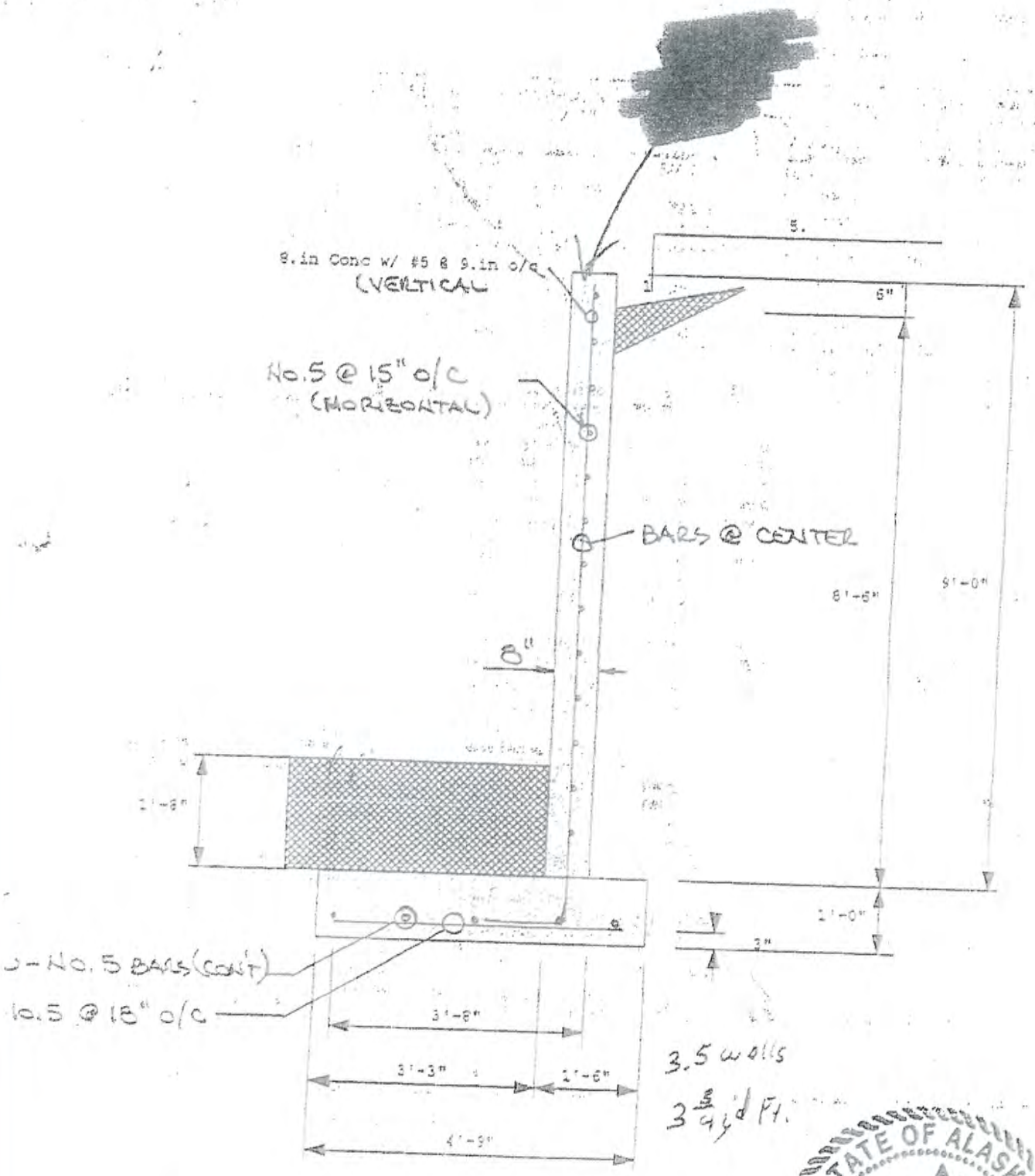

+CIFIC COAST APARTMENTS
WER ENTRY RETAINING WALL
9'-0 WALL

3 3/14/00

STATE OF ALASKA
49TH
F.W. BAXANDALL
No. CE 5826
REGISTERED PROFESSIONAL ENGINEER
3/15/00

MAR 13 2000

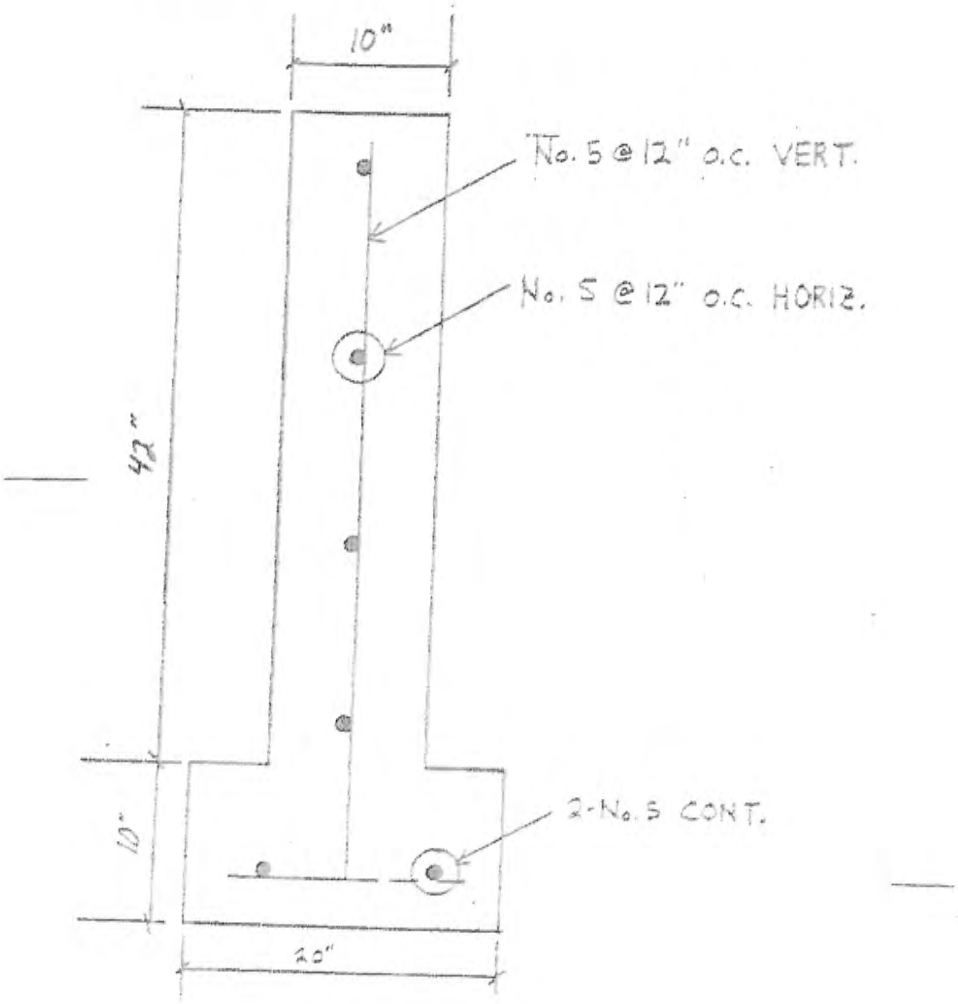

STEMWALL

PROJECT
CLARK APTS.

DRAWN RJJ	REVISED	SCALE 1":1'
DATE 12-12-96	DATE	APPROVED

Baxandall Associates
P.O. Box 32478 Juneau, Alaska 99803
(907) 364-3218

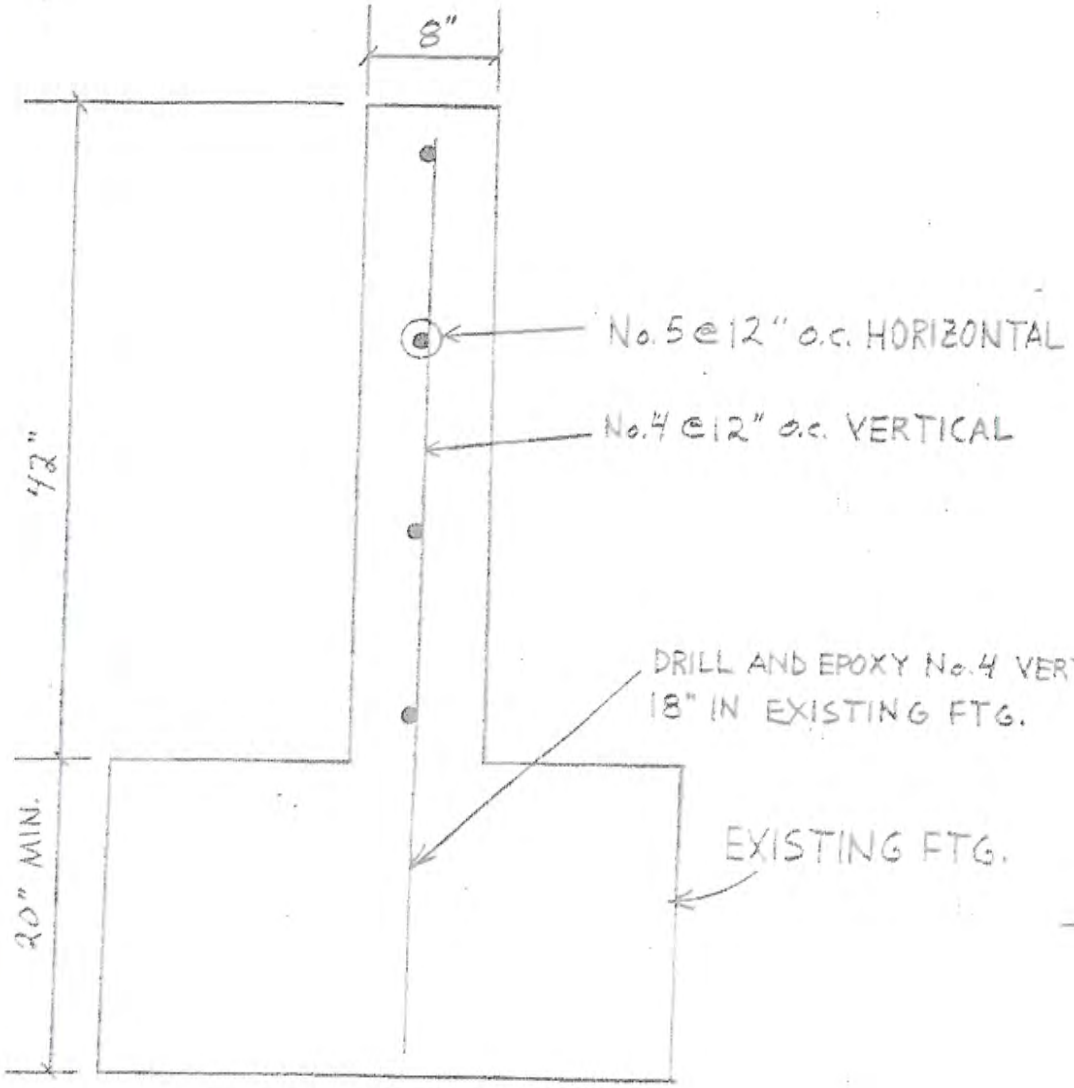

STEMWALL

PROJECT
OWEN CLARK APTS.

DRAWN RJJ	REVISED	SCALE 1" = 1'-0"
DATE 12-11-96	DATE	APPROVED

Baxandall Associates
P.O. Box 32478 Juneau, Alaska 99803
(907) 564-3218

STEMWALL STEEL -

No. 5 @ 12" o.c. VERT.

No. 5 @ 12" o.c. HORIZ.

1/2" DIA. ANCHOR BOLTS @ 24" o.c.

SIMPSON LBP 1/2 BEARING. PLATES

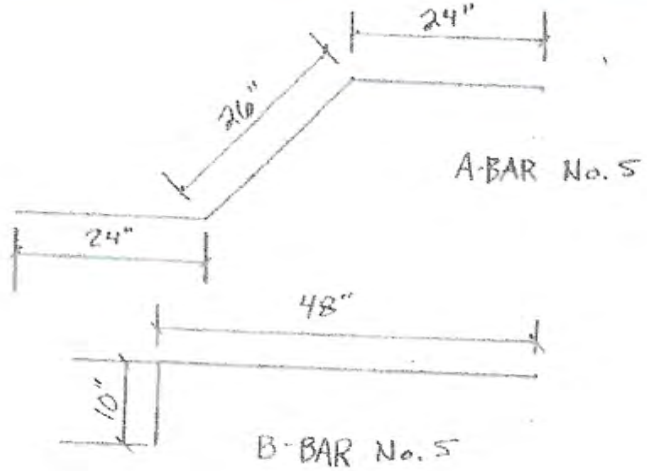

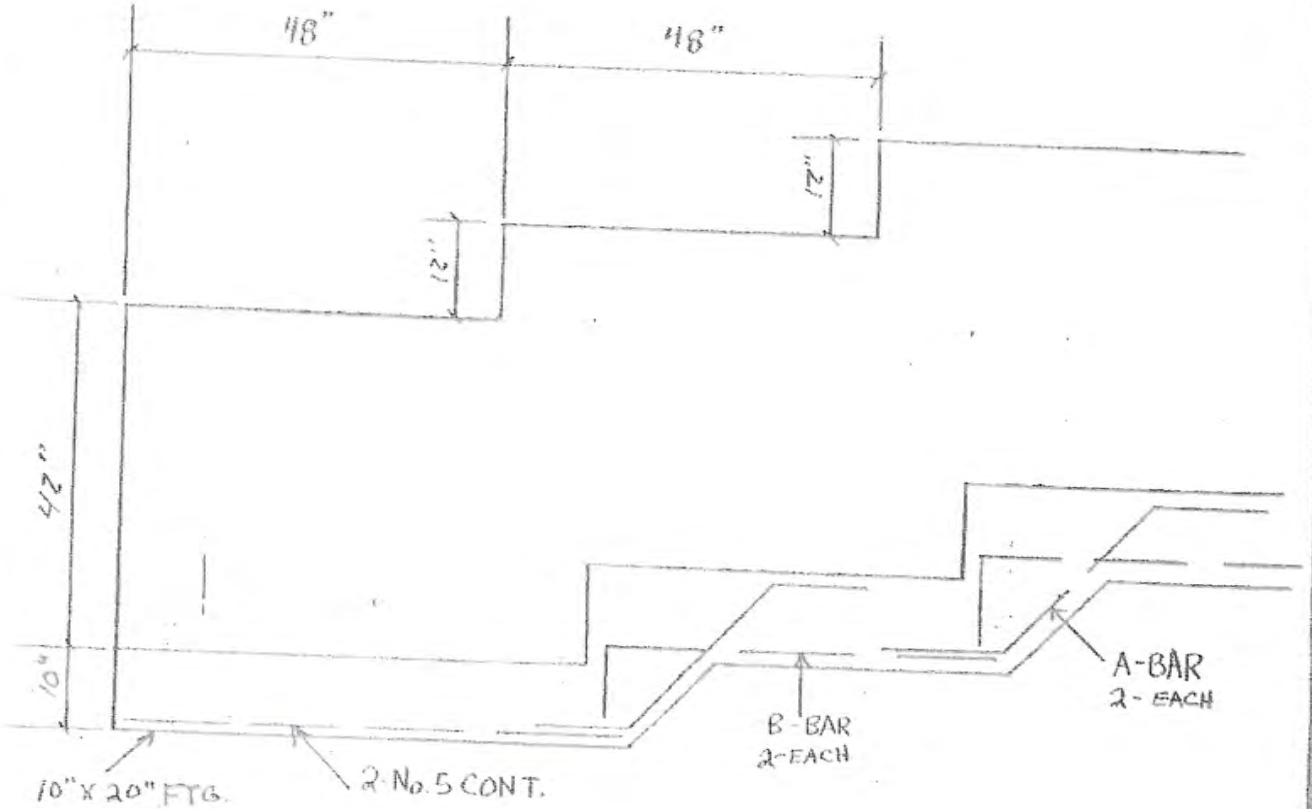

STEPPED STEMWALL

PROJECT CLARK APTS.

DRAWN RJJ	REVISED
DATE 12-12-96	DATE
SCALE 1/2" = 1'	APPROVED

Baxandall Associates
P.O. Box 32478 Juneau, Alaska 99803
(907) 364-3218

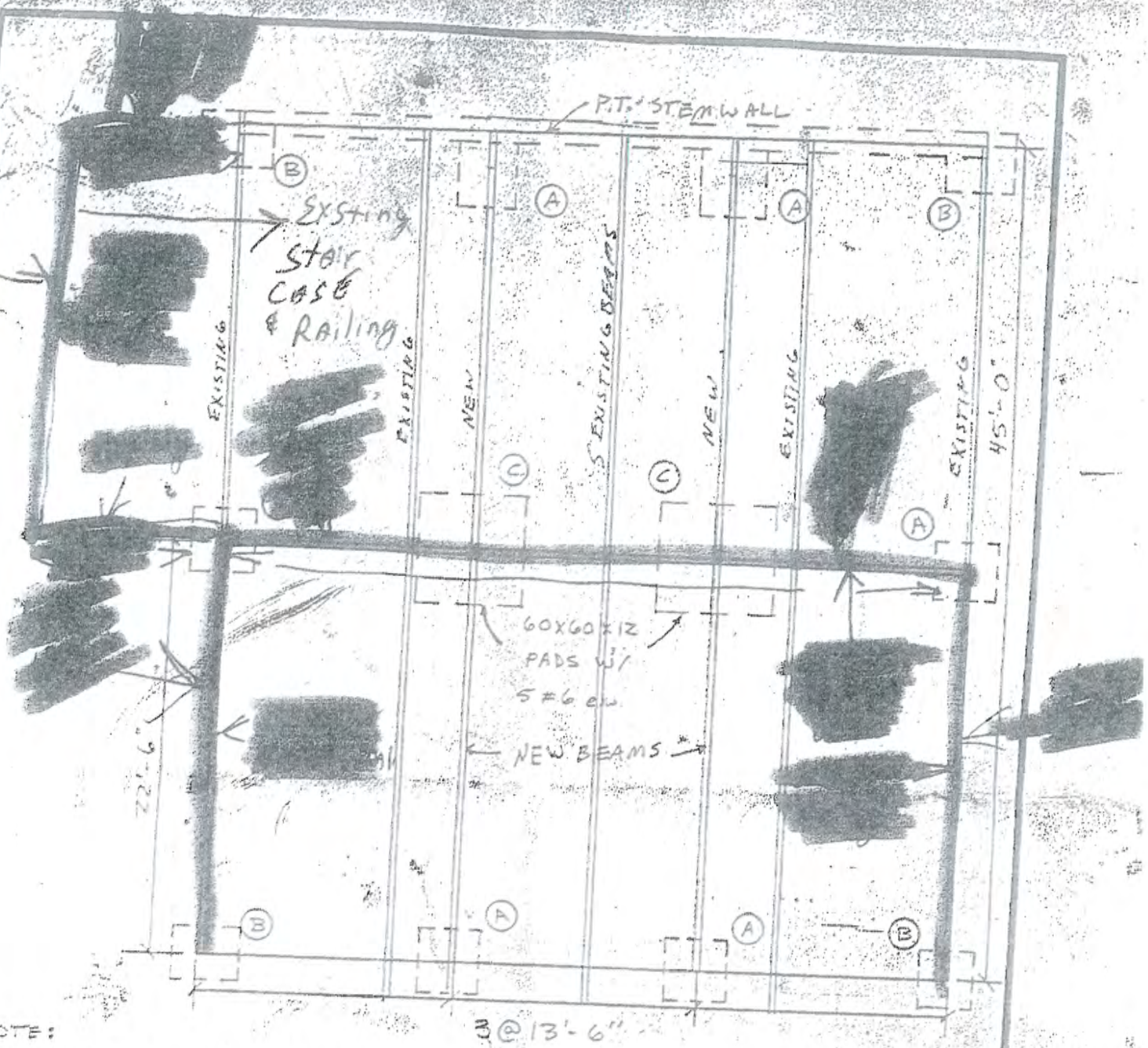

NOTE:

- PAD A 42X42X12 W/ 6 #4 e.w.
- PAD B 36X36X12 W/ 3 #6 e.w.
- PAD C 60X60X12 W/ 5 #6 e.w.

NOTE: REMOVE NON-BEARING ROTTED SECTIONS OF EXISTING 13 BEAMS

FOUNDATION PLAN

PROJECT
OWEN CLARK APARTMENTS
331 GASTINEAU AVENUE

DRAWN RJJ | REVISED | SCALE 1/8 = 1
DATE 7/11/96 | DATE | APPROVED

Baxandall Associates
P.O. Box 32408 Juneau, Alaska 99803
(907) 586-5818

STATE OF ALASKA
49TH
F.W. BAXANDALL
No. CE 5411
REGISTERED PROFESSIONAL ENGINEER

11/12

OK
3/30

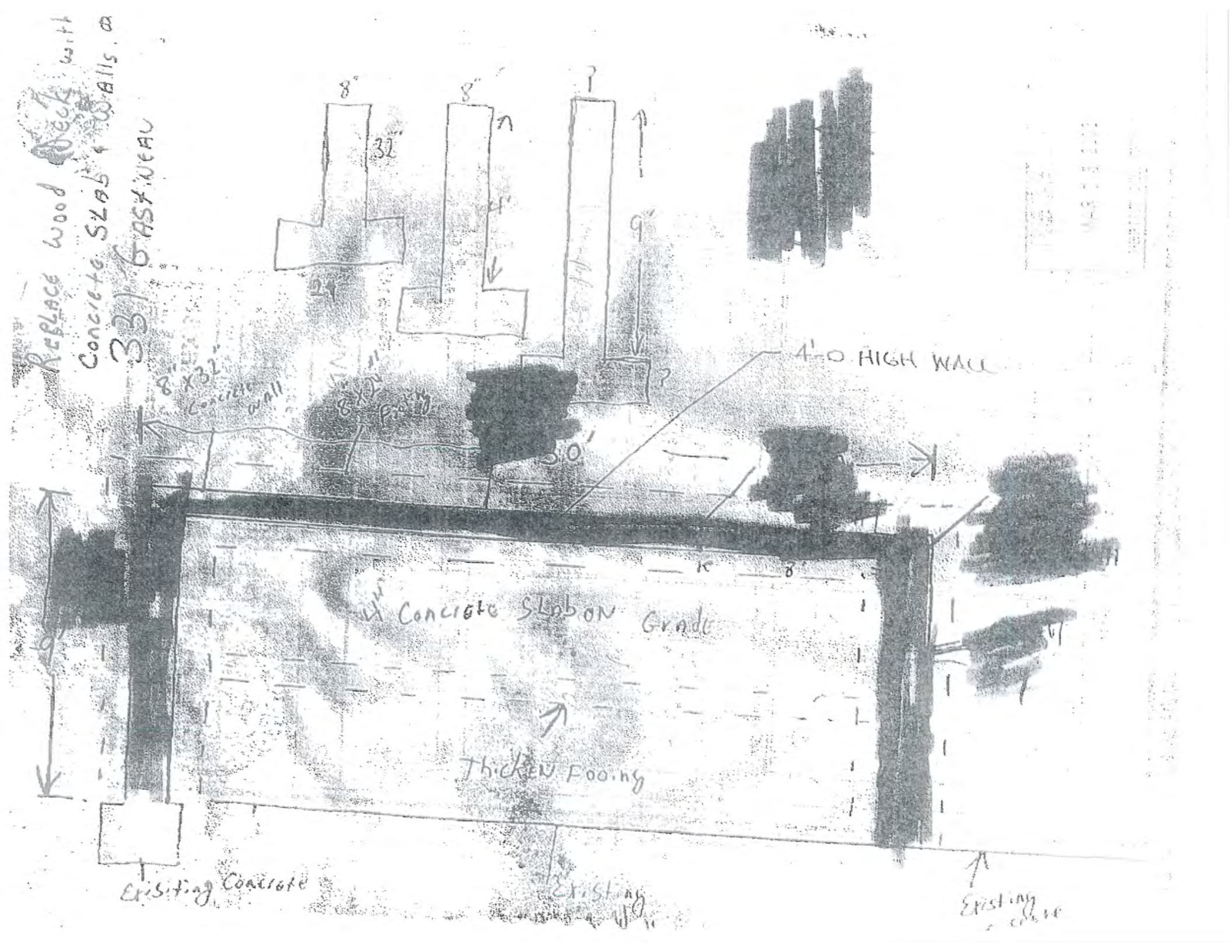
Replace Wood Deck with
Concrete Slab & Walls, a
33'-6" ASTWEAU
8"
8"
32"
24"
4'
9"
8"x32" Concrete Wall
8"x24" Footing
5.0'
4'-0 HIGH WALL
4" Concrete Slab on Grade
Thicken Footing
Existing Concrete
Existing
Existing

UNION CLINIC

SECTION

RECEIVED
BUILDING DIVISION

9/12

PERMIT No. 12247.01

RECEIVED
JUN 17 2010
MRV ARCHITECTS

OK 9 26 96

Received
on
SEP 16 1996
CBJ
Permit Center

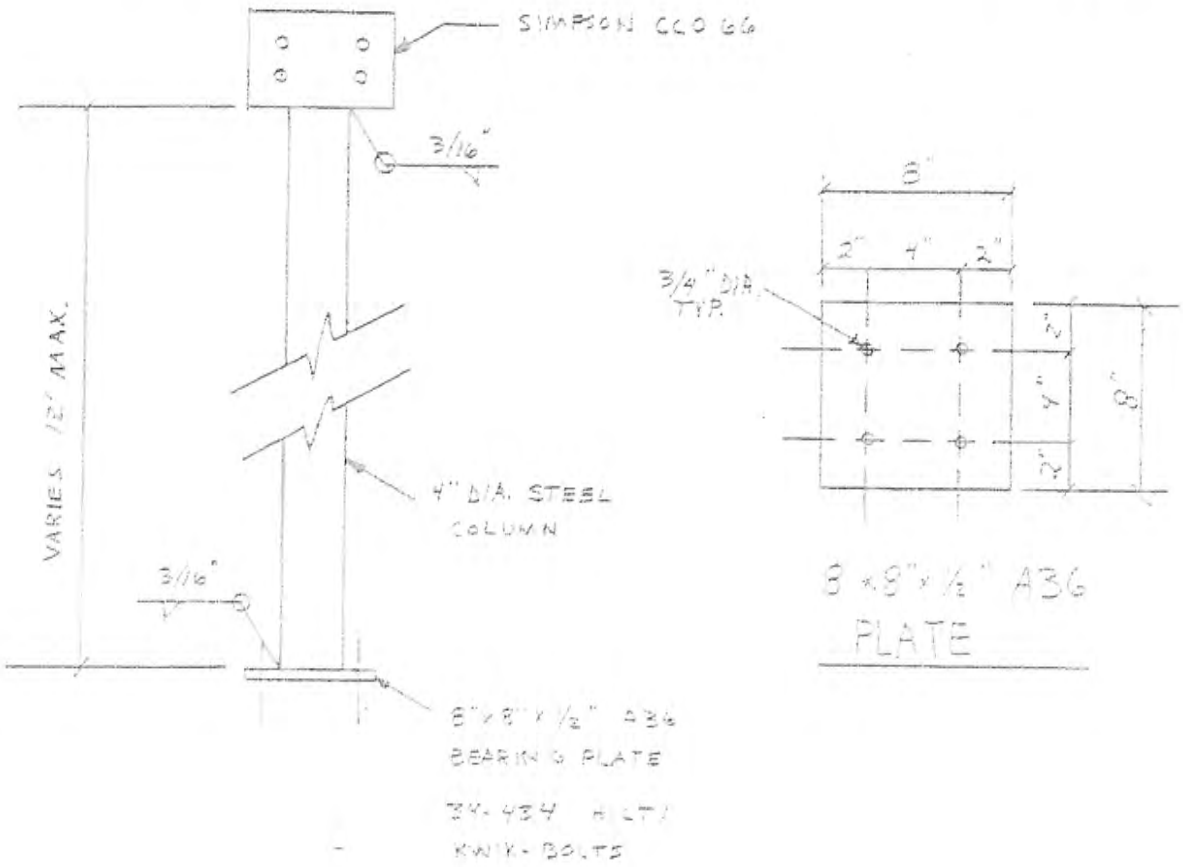

COLUMN DETAIL

PROJECT: OWEN CLARK APARTMENTS, GASTINEAU AVE, JUNEAU, AK		
DRAWN: PJJ	REVISED	SCALE: NTS
DATE: 9-16-96	DATE	APPROVED

Baxandall Associates
P.O. Box 32478 Juneau, Alaska 99803
(907) 364-3213

STATE OF ALASKA
F.W. BAXANDALL
No. CE 5825
REGISTERED PROFESSIONAL ENGINEER

12247-01

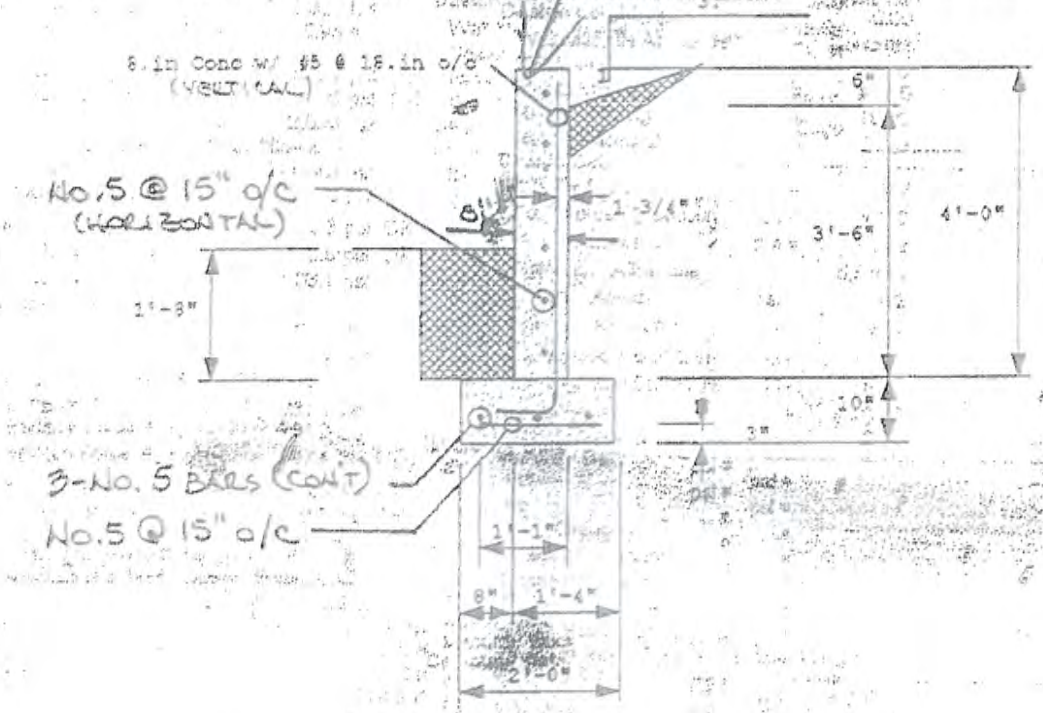

2 yd Footing

3 yds wall

RECEIVED
MAR 13 2000

PACIFIC COAST APARTMENTS

LOWER ENTRY RETAINING WALL

4'-0 WALL

STATE OF ALASKA
49TH
F.W. BAXANDALL
No. CE 5825
REGISTERED PROFESSIONAL ENGINEER

3/15/00

3/14/00

ATTACHMENT B

Post-it® Fax Note 7671	Date 8-25-01	# of pages ▶ 1
To OWEN CLARK	From JOE CASTILLO	
Co./Dept.	Co. CBJ ENG.	
Phone # FOR YOUR INFO	Phone #	
Fax # RE-FAXED	Fax #	

CITY/ BOROUGH OF JUNEAU
ALASKA'S CAPITAL CITY

August 27, 2001

Subject: Gastineau Avenue Reconstruction
Fax: 586-1754

Owen Clark
F&L Apartment Building

Dear Mr. Clark

In an effort to resolve a long-standing disagreement, please consider the following proposal:

Prior owners of your property have spent nearly twenty years arguing with various City employees about the ownership and responsibility of the wall/slope in front of the F&L Apartments. It is not my intention to revisit that argument, but to propose a final solution.

I have estimated that the cost of a new wall in front of your building to be $34,944. I propose the following:

1. A new wall be constructed as part of the Gastineau Avenue project.
2. That CBJ pay for half of the cost and you pay for the other half.
3. That the wall be built similar to other walls on the project, with reinforcing fabric that extends into the road prism.
4. That CBJ own the new wall.
5. That the CBJ grant you an easement for the existing encroachment of your building into the Gastineau Avenue right-of-way.

This letter does not imply acceptance of any responsibility for the existing conditions at the F&L Apartments. It is my belief that the wall was built by the builder of the Apartments to accommodate the building when it was constructed. However, in the past, the CBJ has generously cooperated with adjacent property owners in a similar manner in similar situations.

Time is of the essence of this matter. Please contact me should you desire to pursue this proposal. A decision would need to made shortly in order for our contractor to be able to do the work in a cost-effective manner. Once the street has been rebuilt, construction of a wall would be much more expensive as the new water main, water service, storm drainage facilities, and pavement would be impacted. I suggest that you seriously consider this proposal. Thank you for your consideration.

Sincerely,

Rorie Watt
City Engineer
586-0877

P.S. You have asked about the cost of upgrading your water service to a six inch fire line. At our contractor's prices, a four-inch line would cost $2,000. A six-inch line would be between $2,000 and $3,000. Since your building is already within the right-of-way, we would obviously not extend the line inside your building, stopping some 5 feet outside of the existing failed wall. Please coordinate with JoAnn Quigg of Wilson Engineering at 586-2100 or 321-0116 should you desire to pursue a change in water service size.

cc: Jeff Wilson, Wilson Engineering
Joe Castillo, CBJ Engineering

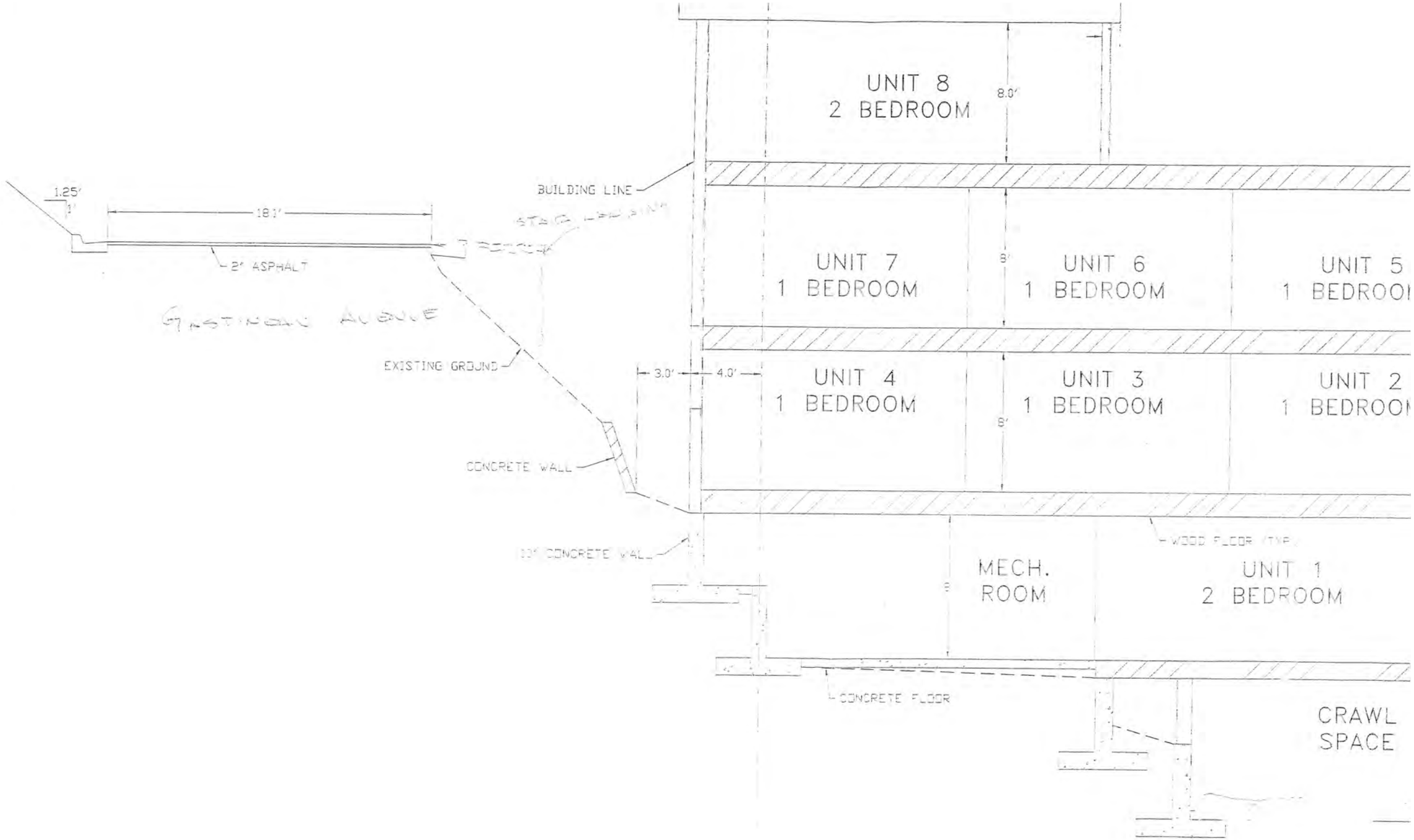

Ozen\Clark Bldg. Profile.dwg Sun, 18/Aug/13 05:40AM GM Graphics (907) 789-5798 (907) 789-9091 (FAX)